sustainable solutions **under one roof**

HEATING / HOT WATER / VENTILATION

Publication No. ZZ 1088-14
January 2016

# ECONOMAIRE 32

## Warm Air Heater

with Intejan Water Circulator

INSTALLATION, COMMISSIONING
& SERVICING INSTRUCTIONS

**Economaire 32 Air Heater** - G.C. No. 42-416-14

**Intejan Water Circulator** - G.C. No. 53-416-31

**These instructions are to be left with the user**

Johnson & Starley

CE

www.johnsonandstarley.co.uk

spares & parts online IBASIS.CO.UK

## CONTENTS


The Benchmark Scheme 2

1 Features 3

2 General Description 3

3 Building Standards 4

4 Technical Data 4

5 Heater Compartment & Clearances 4

6 Ventilation Air 5

7 Duct System 5
*Return Air*
*Warm Delivered Air*

8 Flue Instructions 6
*Flues*
*Horizontal Flue Location*
*Vertical Flue Location*
*Terminal Positions*
*Horizontal Flue Outlets Protrusion*
*Plume terminal Outlet Dimensions*
*Flue & Terminal Components*

9 Electrical 9
*Mains*
*Thermista-stat & its Location*

10 Gas 9

11 Air Heater Commissioning 9
*Preparation*
*System Balancing*
*Lighting Ignition & Main Burner*
*Main Burner Pressure Test*
*Automatic Controls Check*
*Safety Check*

12 Intejan Circulator 12
*Water Circulation System*
*Water Connections*

13 Intejan Circulation Commissioning 13
*Preparation*
*Lighting Ignition & Main Burner*
*Water Burner Pressure Test*
*Safety Checks*

14 Instructions for User 14

15 Maintenance 14
*Routine Maintenance*
*Multifunction Control & Air Heater/Water Circulator*
*Burner Assembly Removal*
*Burner Assembly Cleaning*
*Ignition Burner & Electrode Removal/Replacement*
*Air Circulating Fan Removal & Cleaning*
*Control Module Removal*
*Time Control Switch & LED Indicator Removal*
*Fan Delay Control/Limit Switch Removal*
*Water Circulator Thermostat Removal*
*Heat Exchanger Access*
*Flue Fan Removal & Cleaning*

16 Defect Diagnosis 8

17 Diagnosis Flowchart 19
*Control Flowchart*
*Air Heater Diagnosis Flowchart*
*Control Flowchart*

18 Logic Diagram 22

19 Schematic Diagnosis 23

20 Circuit Diagram 24

21 Dimensions 25

22 List of Spares 26

23 Exploded Diagram 27

24 Important Information & Ancillaries 28

25 Benchmark Checklist and Service Record 29
*Code of Practice*
*Commissioning Checklist*
*Service Record*


**PLEASE READ THESE INSTRUCTIONS CAREFULLY BEFORE STARTING INSTALLATION.**
**LEAVE THESE INSTRUCTION WITH THE USER OR AT THE GAS METER AFTER INSTALLATION**

benchmark COLLECTIVE MARK
THE MARK OF QUALITY FOR THE INSTALLATION, COMMISSIONING AND SERVICING OF DOMESTIC HEATING AND HOT WATER SYSTEMS

### The Benchmark Scheme

Benchmark places responsibilities on both manufacturers and installers. The purpose is to ensure that customers are provided with the correct equipment for their needs, that it is installed, commissioned and serviced in accordance with the manufacturer's instructions by competent persons and that it meets the requirements of the appropriate Building Regulations. The Benchmark Checklist can be used to demonstrate compliance with Building Regulations and should be provided to the customer for future reference.

**Visit www.centralheating.co.uk for more information.**

Installers are required to carry out installation, commissioning and servicing work in accordance with the Benchmark Code of Practice which is available from the Heating and Hot water Industry Council who manage and promote the Scheme.

**In the interest of continuous development Johnson and Starley reserve the right to change specification without prior notice.**
**Johnson and Starley prides itself on it's ability to supply spare parts quickly and efficiently.**

## 1. FEATURES

**These appliances have been tested and certified by Advantica for use with natural gas G20.**

**Note:** These instructions have been written to service both the ECONOMAIRE 32 and the ECONOMAIRE 32/ INTEJAN. If your heater does not have the intejan circulator fitted, simply ignore the relevant section/s.

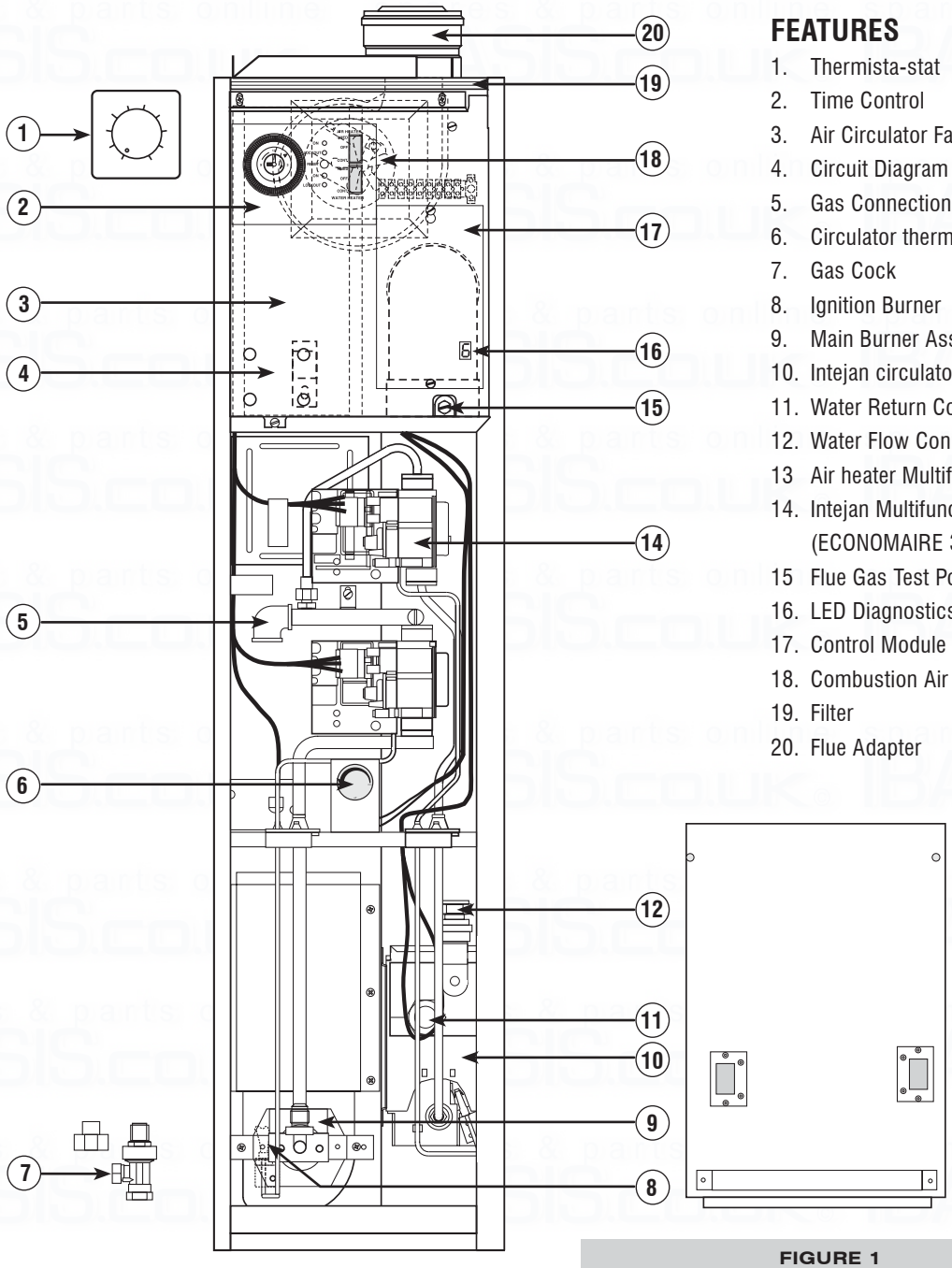


### FEATURES

1. Thermista-stat
2. Time Control
3. Air Circulator Fan
4. Circuit Diagram Label
5. Gas Connection
6. Circulator thermostat
7. Gas Cock
8. Ignition Burner
9. Main Burner Assembly
10. Intejan circulator
11. Water Return Connection
12. Water Flow Connection
13 Air heater Multifunction Control
14. Intejan Multifunction Control (ECONOMAIRE 32 INTEJAN)
15 Flue Gas Test Point
16. LED Diagnostics Indicator
17. Control Module
18. Combustion Air Fan
19. Filter
20. Flue Adapter

**FIGURE 1**
**ECONOMAIRE 32 FEATURES**

## 2. GENERAL DESCRIPTION

2.1 ECONOMAIRE 32/INTEJAN is a fan assisted downflow ducted warm air heater, which is fan flued and room sealed. The heater is supplied with digital temperature control (for maximum comfort) and a water circulator as standard. In addition, a rear rising duct kit is available for both models as well as an INTEJAN circulator kit for retro-fit to the ECONOMAIRE 32.

2.2 The air heater output can be adjusted between 7.3kW (26.4MJ/h, 25,000 Btu/h) and 9.4kW (33.8MJ/h, 32,000 Btu/h) "summer air circulation" of unheated air is available by manual selection (see the user's instructions). INTEJAN output is 3.5kW (12.6MJ/h; 11,900Btu/h).

**THIS APPLIANCE CONFORMS TO BS EN 55014**

## 3. BUILDING REGULATIONS

**STATUTE LAW DEFINES THAT ALL GAS APPLIANCES MUST BE INSTALLED BY COMPETENT PERSONS, i.e. GAS SAFE REGISTERED INSTALLERS.**

**GAS SAFE MEMBERSHIP ENQUIRIES TEL: 0800 408 5500 IN ACCORDANCE WITH THE GAS SAFETY (INSTALLATION AND USE) REGULATIONS (CURRENT EDITION).**

**FAILURE TO COMPLY WITH THESE REGULATIONS MAY LEAD TO PROSECUTION.**

**Installation shall be in accordance with the current editions of:-**

Building Standards (Scotland) (Consolidation) Regulations
Building Regulations
Gas Safety (Installation and Use) Regulations (as amended)
BS 7671 Institute of Electrical Engineers (I.E.E.) Wiring Regulations
BS 6891 Installation of Low Pressure Gas Pipework of up to 28mm (R1) in domestic premises (2nd family gases).
BS 5440 Pt.1 (Flues for Gas Appliances)
BS 5440 Pt.2 (Air Supply for Gas Appliances)
BS 5864 Installation of Gas Fired Ducted Air Heaters
British System Design Manual "Gas Fired Warm Air Heating"
Model and Local Authority Bye-laws
BS 5546 Installation of Domestic Hot Water Supplies.

## 4. TECHNICAL DATA

| | ECONOMAIRE 32 | ECONOMAIRE 32 INTEJAN WATER CIRCULATOR |
|---|---|---|
| **WEIGHT** | 54kg | 61kg |
| **GAS** | G20 | |
| **GAS SUPPLY PRESSURE** | 20mbar | |
| **GA CATEGORY** | I 2H | |
| **COUNTRIES OF INSTALLATION** | GB & IE | |
| **ELECTRICAL SUPPLY** | 230V ~ 50Hz fused 5A 250W | |
| **NOX CLASS** | 1 | |
| **MAXIMUM WATER SIDE OPERATING PRESSURE (PMS)** | N/A | 3 bar |
| **OPEN VENTED SYSTEM** | N/A | YES |
| **SEALED SYSTEM** | N/A | YES |

## 5. HEATER COMPARTMENT & CLEARANCES (See BS 5864)

5.1 **IMPORTANT:** If the heater is to be fitted to an existing base duct (warm air plenum), always ensure that installation is carried out such that the rear left hand corner of the heater is aligned with the rear left hand corner of the base duct, so that any overhang or blanking off will be at the front and/or right hand side. In any event, blanking plates must be mechanically secured and all joints sealed.

5.2 When the heater is fitted into a compartment, a minimum clearance from the compartment walls of 3mm (1/8") at the sides and rear and 75mm (3") at the front must be left. Consideration should also be given to the space required for the removal and replacement of the filter tray and the entry of the gas, water and electrical supplies. If gas and /or water connections are made from a side entry, a minimum clearance of 75mm (3") is required at that side.

5.3 For service access, a minimum of 450mm (18") is required at the front of the heater. Space must also be allowed, in a compartment installation, to permit the removal of the heater. The clearance between the appliance and the compartment should be not less than 75mm (3"). However, if clearances are less than 75mm, the internal surface of the compartment must be lined with non-combustible material and the compartment must be of a fixed rigid structure.

5.4 In airing cupboard installations, the part used as the air heater compartment must comply with the relevant section of BS 5864 and must be completely separated by either a non-combustible partition or a perforated metal partition with the perforations not exceeding 13mm (½"). The secondary flue must be a tight fit where it passes through the partition and must be suitably protected (see BS 5440: Part 1).

5.5 In under-stairs installations, the compartment must comply with the relevant section of BS 5864, provided that in addition all internal surfaces (including the base) are non-combustible or lined with non-combustible material. This requirement is applicable only to dwellings of more than two storeys.

5.6 In free-standing installations, (see instructions packed with TC32 or TC32R top closure kit), only one or two walls will be in close proximity to the air heater; these must be non-combustible.

5.7 Where the air heater is to be installed onto a combustible surface and under-floor ducting used, a suitable base tray (BT32) MUST be used in order to provide insulation. NB where a base plenum is used no base tray is required!

## 6. VENTILATION AIR

6.1 When installed in a compartment two permanent ventilation openings into the compartment are required, one at high level and one at low level. The minimum effective areas specified in Table 1 are related to the rated heat input of the air heater and assume that an INTEJAN circulator is fitted.

## 7. DUCT SYSTEM

(See British Design Manual - Gas fired Warm Air Heating)

### 7.1 RETURN AIR

7.1.1 Room-sealed appliances may be installed without return air ducting, provided that the path between the return air grille and the appliance return air inlet is protected in such a manner that the required air-flow will be maintained at all times. The return air grille MUST have a free area of not less than 860cm$^2$ (137in$^2$). It is recommended that the return air duct not be routed directly from the main living area, but from a convenient central area serving the remainder of the dwelling.

7.1.2 The return air system should be constructed of fire-resistant material. The flue shall not be run through an area serving as a return air plenum. It is extremely important that the correct size of return air grilles and ducting is used. For heaters on maximum output the return air duct size should not be less than the equivalent of 250mm x 200mm (10" x 8"). If flexible duct is used the duct diameter should not be less than 300mm (12") diameter. The return air grille should have a free area of not less than 860cm$^2$ (137in$^2$).

7.1.3 An adequate and unobstructed return air path is essential from areas not served by a directly ducted return and to which warm air is delivered. All such rooms should be fitted with relief grilles which have a free area of 0.0088m$^2$/kW (1in$^2$/250Btu/h) of heat supplied to the room. The only exceptions are kitchens, bathrooms and WC.'s.

7.1.4 The return air duct should allow for ease of removal for access to the flue.

7.1.5 All duct work in the room or internal space in which the heater is installed shall be mechanically secured and sealed with ducting tape.

### 7.2 WARM DELIVERED AIR

7.2.1 All duct work, including riser ducts, should be fully insulated with 50mm (2") fibreglass or similar. If short extended duct runs are taken below floor level these should be similarly insulated and in addition wrapped with a sound vapour proof barrier. They must also be protected from crushing.

7.2.2 The duct system should be carefully designed (as given in the guidelines in the British System Design Manual) to suit the needs of specific heating requirements and building layout. The type of duct system (e.g. radial/extended plenum/ stepped) should be installed using the least number of fittings to minimise airflow resistance. The base duct, which equalises the air pressure to supply ducts, must be constructed to support the weight of the heater, which must be sealed using self-adhesive foam strip, ducting tape or sealing compound. All ducting and blanking plates must be mechanically secured and sealed.

| | |
|---|---|
| **VENTILATED FROM INSIDE BUILDING** | Low level grille 162cm$^2$ (25in$^2$) |
| | High level grille 162cm$^2$ (25in$^2$) |
| **VENTILATED FROM OUTSIDE BUILDING** | Low level grille 81cm$^2$ (13in$^2$) |
| | High level grille 81cm$^2$ (13in$^2$) |

**TABLE 1 MINIMUM EFFECTIVE AREAS**

# 8. FLUE INSTRUCTIONS

**NOTE: THIS APPLIANCE MUST ONLY BE INSTALLED WITH THE SUPPLIED ACCESSORIES AND TERMINAL.**

## 8.1 FLUES

**NOTE: The ECONOMAIRE 32/INTEJAN can be used with horizontal or vertical flue types C12 and C32. You should also consult (or be familiar with) British Standards BS 5440 Pt. 1 Flues**

8.1.1 All joints must be soundly sealed.

8.1.2 Sufficient support brackets must be used in order to support the total weight of the flue system.

8.1.3 The flue must conform with Building Regulations and British Gas Materials and Installations specification (3rd edition) regarding clearance and shielding from combustible materials.

8.1.4 The horizontal flue length MUST NOT be less than 300mm plus 90˚ bend and MUST NOT exceed 12m excluding terminal.

8.1.5 The total vertical flue length MUST NOT be less than 1m and MUST NOT exceed 12m excluding terminal.

8.1.6 Total length refers to the equivalent worked flue length and therefore includes bends and NOT the distance from the heater to the flue terminal.

8.1.7 When calculating total flue length, reference MUST be made to the following 'equivalent lengths':

a) 90˚ bend = 2m
b) 45˚ bend = 1m

8.1.8 The maximum number of 90˚ bends that can be used is:

a) Horizontal = 4
b) Vertical = 4

8.1.9 If a 'short flue' is used, the factory fitted flue orifice MUST be left in place (see figure 4).

8.1.10 'Short flue' refers to a total flue length not exceeding:

a) Horizontal (plus 90˚ bend) = 0.8m
b) Vertical (including terminal) = 5m

8.1.11 Where the total flue length exceeds these lengths, the flue orifice MUST be removed.

8.1.12 The heater is supplied with either a horizontal or vertical flue, dependant upon your specification when ordering. Reference should be made to Table 3 for extra flue/terminal components.

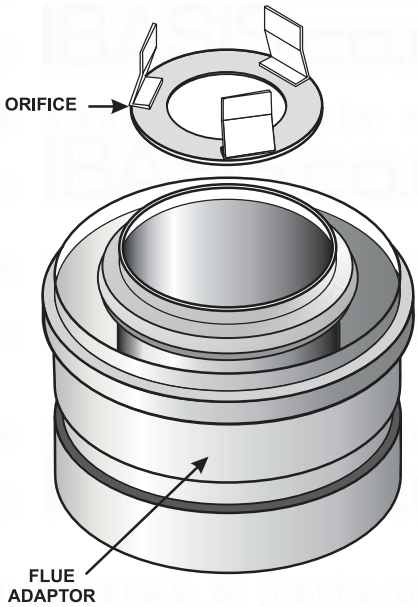


**FIGURE 2**
**FLUE ADAPTOR & ORIFICE**

## 8.2 HORIZONTAL TERMINAL LOCATION

8.2.1 The terminal must be positioned on the outside of the building and allow for the free passage of air across it at ALL times.

8.2.2 Avoid positions where the terminal is adjacent to projections, particularly under a balcony or immediately adjacent to a drain pipe.

8.2.3 The terminal position must ensure that combustion products cannot enter the building in which the heater is installed (or any adjacent building) through windows, doors or by any others means.

8.2.4 Figure 3 shows recommended terminal positions

8.2.5 It is recommended that the flue is fitted so that the outer part is flush with the wall. However, where this is not the case, the maximum protrusion of the outer part of the flue through the wall MUST NOT exceed 22mm (see figure 3)

8.2.5 If the heater is to be installed in a timber framed building you MUST consult British Gas publication "Guide for Gas Installations in Timber Framed Housing DM2" or your local gas region.

8.2.6 Where the lowest part of the flue terminal is located less than 2 metres above the ground, a balcony, or above a flat roof across which there is access, the terminal MUST be fitted with a Tower Flue Components type K3 guard (or similar) such that the distance between the guard and the nearest part of the terminal is no less than 50mm.

8.2.7 Reference should be made to Table 3 for required terminal components and guard.

**8.2.8 NOTE: TO ENSURE THAT RAINWATER CANNOT ENTER THE HEATER UNIT, THE FLUE MUST BE INSTALLED WITH A SLIGHT FALL AWAY FROM THE HEATER.**

## 8.3 VERTICAL TERMINAL LOCATION

8.3.1 The ECONOMAIRE 32/INTEJAN is designed to be used with a vertical flue where the installation of a horizontal flue is either not possible or not desired.

8.3.2 Installation of a vertical flue can be on either a flat or pitched roof with a pitch angle of between 25˚ and 50˚.

8.3.3 The terminal MUST be positioned on the outside of the building and allow for the free passage of air across it at ALL times.

8.3.4 Avoid positions where the terminal is adjacent to projections; particularly under a balcony.

8.3.5 The terminal position must ensure that combustion products cannot enter the building in which the heater is installed (or any adjacent building) through windows, doors or by any other means.

8.3.6 Figure 3 shows recommended terminal positions.

8.3.7 Reference should be made to Table 3 for the required terminal components.

**FIGURE 3. TERMINAL POSITIONS**

| TABLE 7 | TERMINAL POSITION | MINIMUM DISTANCE |
|---|---|---|
| A | Directly below an opening, air brick, opening window etc | 300mm |
| B | Above an opening, air brick, opening window, etc. | 300mm |
| C | Horizontally to an opening, air brick, opening window etc. | 300mm |
| D | Below gutters, soil pipes or drain pipes. | 75mm |
| E | Below eaves. | 200mm |
| F | Below balconies. | 200mm |
| G | From a vertical drain pipe or soil pipe. | 150mm |
| H | From an internal or external corner. Greater than 450mm protrusion. | 300mm |
| I | Above ground, roof or balcony level. | 300mm |
| J | From a surface facing the terminal. | 600mm |
| K | From a terminal facing the terminal. | 1,200mm |
| M | Vertically from a terminal on the same wall. | 1,500mm |
| N | Horizontally from a terminal on the same wall. | 300mm |
| Q | Above intersection with roof. | 530mm |
| P | From a vertical structure on the roof | 300mm |
| R | From the terminal to the boundary | 300mm |

**TABLE 2. TERMINAL POSITIONS**

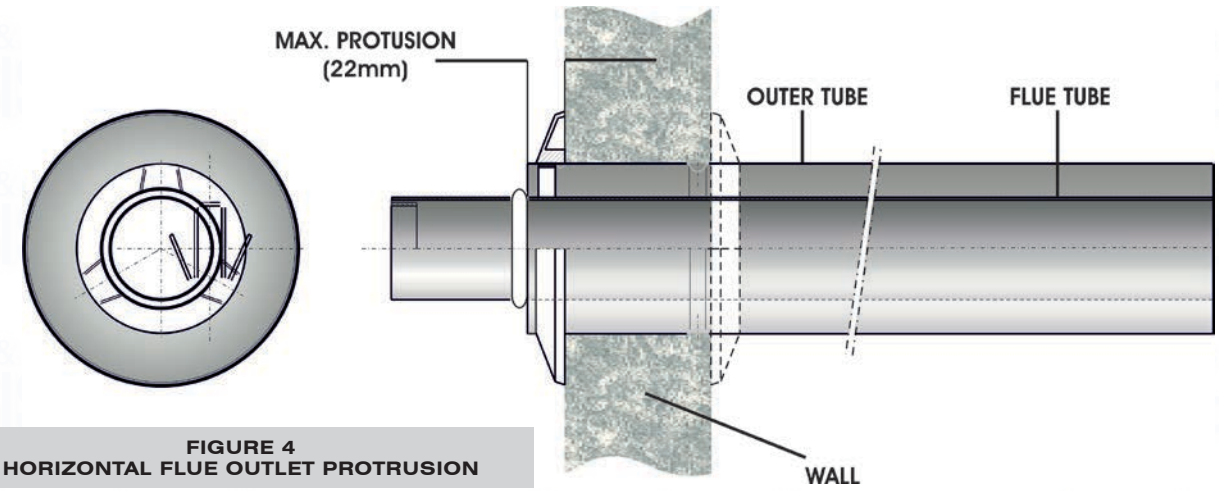


**FIGURE 4**
**HORIZONTAL FLUE OUTLET PROTRUSION**

**FIGURE 5. PLUME TERMINAL OUTLET DIMENSIONS**

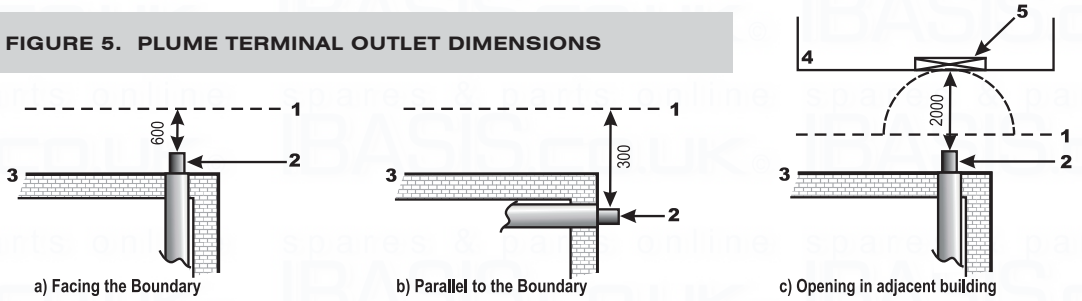


| ITEM | DESCRIPTION | QTY | PART No. | COLOUR |
|---|---|---|---|---|
| 1 | 90˚ Standard Flue Elbow | 1 | 1000-0014840 | White |
| 2 | 45˚ Flue Elbow | 1 | 1000-0014850 | White |
| 3 | 500mm Extension | 1 | 1000-0014870 | White |
| 4 | 1000mm Extension | 1 | 1000-0014860 | White |
| 5 | Vertical Terminal & Support Bracket | 1 | 1000-0014880 | Anthracite |
| 6 | Vertical Terminal & Support Bracket | 1 | 1000-0014980 | Terracotta |
| 7 | Lead Pitched Roof Flashing & Collar | 1 | 1000-0014890 | Anthracite |
| 8 | Lead Pitched Roof Flashing & Collar | 1 | 1000-0014990 | Terracotta |
| 9 | Aluminium Flat Roof Flashing | 1 | 1000-0014900 | Aluminium |
| 10 | Horizontal Wall Terminal | 1 | 1000-0014910 | White |
| 11 | Wall Plates (for above) | 2 | 1000-0014920 | n/a |
| 12 | Horizontal Wall Terminal & 2 x Wall Plates | 1 | 1000-0014930 | n/a |
| 13 | Condensate Drain | 1 | 1000-0014940 | White |
| 14 | Syphon Kit (for above) | 1 | 1000-0014950 | n/a |
| 15 | Condensate drain & 1 x Syphon Kit | 1 | 1000-0014960 | n/a |
| 16 | Wall Bracket (100mm diameter) | 1 | 1000-0014970 | n/a |
| 17 | Terminal Guard | 1 | 1000-0015430 | n/a |

**TABLE 3. FLUE & TERMINAL COMPONENTS**

## 9. ELECTRICAL

**WARNING: THIS APPLIANCE MUST BE EARTHED!**

### 9.1 MAINS

9.1.1 The heater is supplied with mains cable (PVC sheathed, heat resisting to 85˚C), 3 core: Brown; Blue; Green/Yellow, 6A, 0.75mm$^2$), connected to a terminal block and exiting through the heater at the right hand top. The cable is suitable for a 230V 50Hz supply and requires connection to the fixed wiring using a double pole switched, fused spur with a contact separation of at least 3mm in ALL poles. The fuse fitted must be rated 5A to BS 1362. Connections must also be in accordance with the current edition of I.E.E Regulations BS 7671.

**NOTE:** If, for any reason, the heater is re-wired, then 3 core cable that meets the above specification MUST be used. Under NO circumstances, should 5 core cable be used for the combined purpose of supplying power to the heater and connecting the thermista-stat!

9.1.2 Fan delay and overheat (limit controls) are not adjustable and are factory set so that the limit switch opens at 80˚C and closes at 40˚C.

9.1.3. An electronic controller (thermista-stat) is supplied which acts like a room thermostat.

### 9.2 THERMISTA-STAT & ITS LOCATION.

9.2.1 The thermista-stat should be located where there is free air circulation and positioned approx. 1.5m (5ft) from the floor.

9.2.2 Avoid the following locations:

a. In a room where temperature is greatly affected by the sun or any other heat source, e.g. radiant fire, wall light fittings or TV set.

b. Near an outside door or windows, or on an outside wall.

c. Where it will be affected by warm air ducts, diffusers, waste pipes or the heater itself.

d. Where it will be subjected to vibration.

9.2.3 Connect the thermista-stat wires to terminals ‘8’ and ‘9’ on the terminal block (see Figures 15 & 16).

## 10. GAS *(See BS 5864 and BS 6891)*

10.1 The local gas supply conditions MUST be adequate for the specified burner pressures as stated in the technical data (paragraph 1.3)

10.2 An independent gas supply pipe from the meter is to be preferred wherever possible. Where this is not possible, the pipe must be capable of taking the complete input of the heater and all other gas appliances being served by the same pipe. This supply should be suitably sized to conform to British Standards requirements of no more than 1.0 mbar (0.4” wg) pressure drop (See table of discharge in BS 6891).

10.3 The ½” union gas cock (supplied) MUST be fitted to the gas inlet of the heater for easy isolation during servicing. The gas pipe should be fitted and installed so as to be durable, substantial and gas tight. To assist in determining where a gas connection may not be tight, a leak detection fluid should be applied around the connection. Under no circumstances should a flame be used to locate a gas leak. Gas entry to the air heater is through either side or the base, to a Rc½ (½” BSP. external [taper] thread).

## 11. AIR HEATER COMMISSIONING

### 11.1 PREPARATION

After installation of the appliance, you MUST do the following:

11.1.1 Test for gas leakage using proprietary detection fluid and seal any leaks found.

11.1.2 Carry out preliminary electrical system checks.

11.1.3 Ensure that:

a. filter, fan and fan compartments are free from obstructions.

b. all registers or grilles are open and conform to design specifications.

c. return, relief and ventilation air installations are adequate.

### 11.2 SYSTEM BALANCING

11.2.1 Set the air heater electrical supply ON.

11.2.2 Set the thermista-stat to the “SUMMER AIRFLOW” position.

11.2.3 Balance the system to provide the required volume proportions at the warm air outlets.

**NOTE:** If the system includes ceiling diffusers, the air through these should be NOT LESS THAN 1.5m/s (300ft/min), except for very small rooms, (i.e. bathrooms etc.). Outlet faces may require partial blanking in order to achieve this.

### 11.3 LIGHTING IGNITION & MAIN BURNER

11.3.1 Turn on the gas supply to the heater.

11.3.2 Set both the “AIR HEATER” and “WATER HEATER” switches on the time control unit to the “OFF” position.

11.3.3 Set the thermista-stat to “9”.

11.3.4 Locate the status LED indicator which can be observed through the inspection hole in the bottom right hand corner of the control module.

11.3.5 Turn on the mains power supply to the heater

11.3.6 Set the "AIR HEATER" switch on the time control to "CONT." and observe the LED status indicator.

11.3.7 Whilst the control module runs through its diagnostic cycle the decimal point (DP) in the bottom right hand corner of the LED display will flash continuously.

11.3.8 The ignitor will spark for a maximum period of 60 seconds during which time the ignition and main burners SHOULD ignite and the igniter will stop.

11.3.9 When the control module reaches stage 5, (indicated by "5" on the LED) power is fed to the gas valve and the green LED "ON" light on the indicator panel will illuminate. After a period of approx. 5 seconds, the module will move on to stage 6 (indicated by "6" on the LED).

**NOTE: Regardless of when the burner ignites during the 60 second period, the LED will continue to display stage 6.**

11.3.10 If, after the 60 second period, the main burner has ignited the LED indicator will show "0" and the green LED "ON" light on the indicator panel will remain steady.

11.3.11 If the main burner fails to ignite, the red LED marked "LOCKOUT" will illuminate on the display panel and the LED status indicator will display an alphanumeric character relevant to the fault detected.

11.3.12 In the event of a lockout and the ignition and main burners failing to ignite, reference should be made to Table 6 in the fault finding section of these instructions in order to establish the fault condition.

11.3.13 Allow the air heater to operate for a minimum of 15 minutes to ensure stability.

11.3.14 Reset the thermista-stat to the desired comfort level

11.3.15 Set the time control to the desired "on and "off" periods.

11.3.16 Set the "AIR HEATER" switch on the time control to "TIMED".

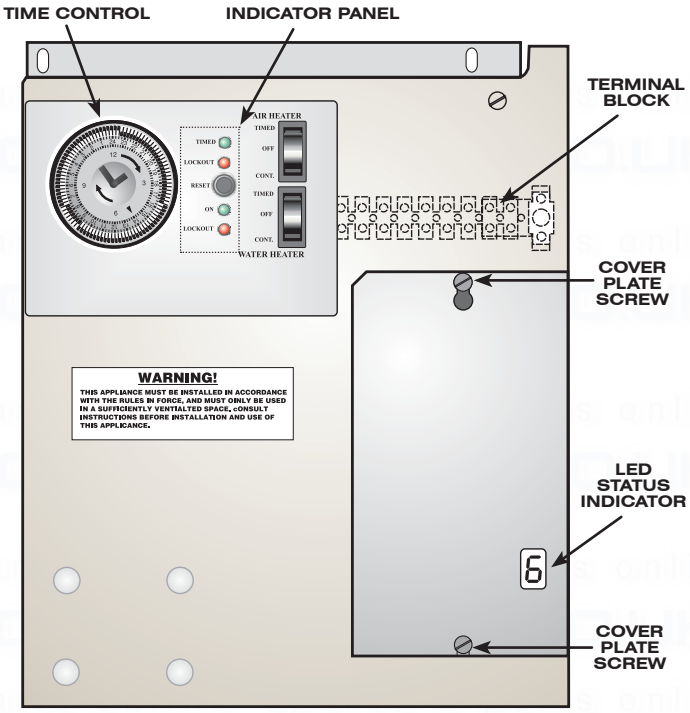


**FIGURE 6**
**ELECTRICAL DOOR ASSEMBLY**

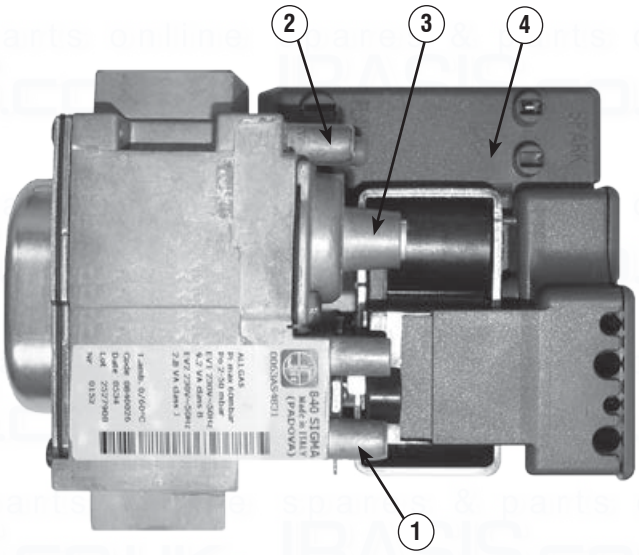


**A) SIDE VIEW**
**with ignition controller in place**

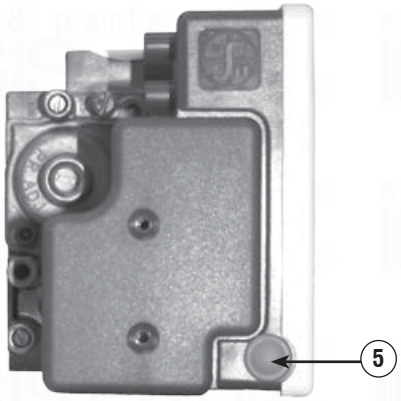


**B) FRONT VIEW**
**with ignition controller in place**

## FEATURES

1 Inlet Pressure Test Point
2 Outlet Pressure Test Point
3 Burner Pressure Adjuster
4 Ignition Control
5 Manual Reset

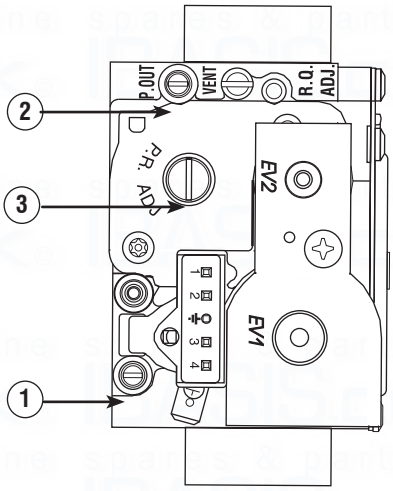


**C) FRONT VIEW**
**with ignition controller removed**

**FIGURE 7. IGNITION CONTROLLERS**

## 11.4 MAIN BURNER PRESSURE TEST

**NOTE: AIR HEATER BURNERS ARE FACTORY SET TO PROVIDE A NOMINAL HIGH RATE OUTPUT AS DETAILED IN TABLE 4**

11.4.1 Loosen the screw on the outlet pressure test point and fit a pressure test gauge (see Figure 7)

11.4.2 Check the gauge reading against the information at Table 4.

11.4.3 If necessary, use the burner pressure adjuster to obtain required gauge reading in accordance with Table 4.

11.4.4 Remove the pressure gauge and re-tighten screw on the outlet pressure test point.

| AIR HEATER | LOW RATE | | | HIGH RATE | | | WATER CIRCULATOR | | |
|---|---|---|---|---|---|---|---|---|---|
| | kW | MJ/h | Btu/h | kW | MJ/h | Btu/h | kW | MJ/h | Btu/h |
| INPUT | 9.8 | 35.3 | 33,500 | 12.25 | 44.1 | 41,800 | 4.86 | 17.5 | 16,600 |
| OUTPUT | 7.3 | 26.4 | 25,000 | 9.4 | 33.8 | 32,000 | 3.5 | 12.6 | 11,900 |
| GAS RATE CV 1037 Btu/ft³ | 0.93m³/h (32.9ft³/h) | | | 1.15m³/h (40.5ft³/h) | | | 0.458m³/h (16.2ft³/h) | | |
| BURNER SETTING PRESSURE (HOT) | 10.0mbar (4.0" wg) | | | 14.6mbar (5.9" wg) | | | 15.0mbar (6.0" wg) | | |
| MAIN INJECTOR | POLIDORO AL 270 | | | | | | AMAL 3187/001/400 | | |

**TABLE 4. MAIN BURNER PRESSURE SETTING**

## 11.5 AUTOMATIC CONTROLS CHECK

11.5.1 Light the ignition and main burners as detailed in 11.3.

11.5.2 Allow the heater to operate for 15 minutes to ensure stability.

11.5.3 After a short period, ensure that the fan increases to full speed.

11.5.4 When the temperature reaches the control setting, check that the main burner cycles ON and OFF at intervals of approx. 75 to 120 seconds.

**REMINDER: At all times of commissioning, complete all the relevant sections of the Benchmark Checklist located on the inside back pages of this document prior to handing over the appliance to the occupier.**

benchmark COLLECTIVE MARK
THE MARK OF QUALITY FOR THE INSTALLATION, COMMISSIONING AND SERVICING OF DOMESTIC HEATING AND HOT WATER SYSTEMS

## 11.6 SAFETY CHECK

In order to check the correct operation of the control module, run the heater for a short period and introduce a fault condition by carrying out the following sequence:

11.6.1 Check for gas soundness within the appliance.

11.6.3 Turn on both the gas and electrical supplies to the heater.

11.6.4 Set the "AIR HEATER" switch on the time control unit to "CONT".

11.6.5 Light the ignition and main burners as described in section 11.3

11.6.6 Allow the heater to run for a period of 5 minutes to stabilise.

11.6.7 Turn off gas supply to heater at the heater Gas Cock. DO NOT TURN OFF AT GAS METER!

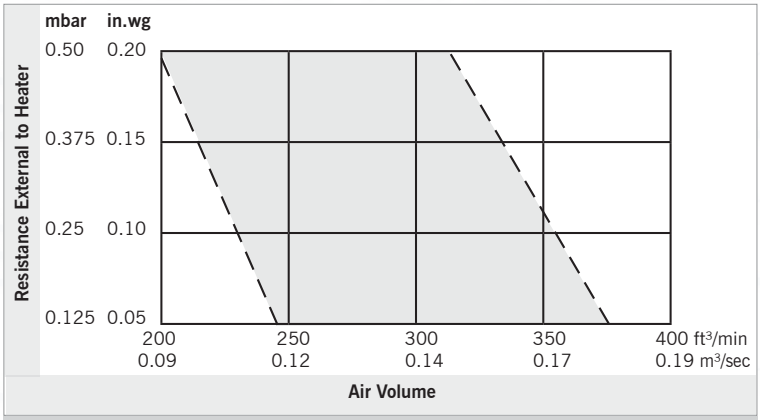


**TABLE 3. FAN PERFORMANCE CURVE**

11.6.8 Having detected the fault condition, the module should cause the red LED on the indicator panel to flash and the module will go through the ignition sequence. Having detected the fault condition a second time, the control module should cause the heater to go into lockout, indicated by a constant red LED and the LED status indicator will show "6".

11.6.9 Reinstate gas suppiy and wait for a minimum period of 10 seconds.

11.6.10 Depress the "RESET" button on the Indicator Panel.

11.6.11 The heater will go through its ignition procedure and the ignition and main burners SHOULD ignite.

11.6.12 Set the "AIR HEATER" switch on the time control unit to "TIMED"

# 12. INTEJAN CIRCULATOR

## 12.1 WATER CIRCULATION SYSTEM

Detailed recommendations for the water circulation system are given in BS 6798, BS 5449 (for small bore and microbore central heating systems), and BS 5446. The maximum water side operating pressure (PMS) is 1bar.

12.1.1 To ensure good circulation in gravity circuits, flow pipes should be designed to run vertically from the water heater before running laterally. Any lateral run should be less than 2 x the previous vertical run. Pipework should be installed with a rise towards the vent point. In systems with poor circulation, a pump kit is also available.

12.1.2 Drain cocks must be located in accessible positions that permit the draining of the whole system, including the appliance and hot water storage vessel. A drain cock should be fitted at the lowest point of the water heating circuit and, in the case of an indirect system, another must be fitted at the lowest point of the cold feed. Drain cocks should be at least ½" nominal size and be in accordance with BS 2879.

12.1.3 Economy valves can only be used in a DIRECT installation.

**NOTE:** The circulator thermostat is factory set to provide a temperature range of 50˚C to 82˚C. The temperature is increased by rotating the thermostat knob clockwise and temperature stop 2 MUST be left in position (see figure 9) if the circulator is used in a direct application, ensuring a maximum temperature of 60˚C. For indirect applications, remove temperature stop 2.

In order to ensure that soundness of the heater is maintained, you MUST ensure that flow and return pipes into the sealed compartment are sealed with the supplied grommets!

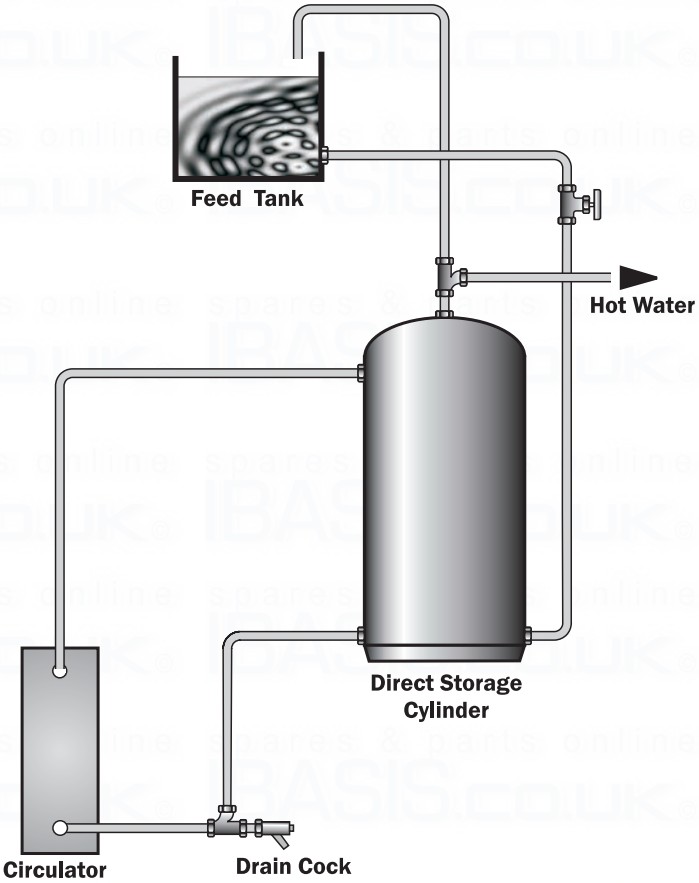


**FIGURE 8.**
**TYPICAL INTEJAN DIRECT SYSTEM APPLICATION**

## 12.2 WATER CONNECTIONS

**NOTE: Both flow and return connections are Rp¾ (¾ in BSP female) connections.**

**IMPORTANT: Use compression fittings at the appliance flow and return connections and at the air heater casing exit, to facilitate easy access to the circulator body.**

12.2.1 Remove the fixing screws holding the sealing panel in place.

12.2.2 Carefully remove the sealing panel, such that access can be gained to the circulator compartment.

**12.2.3 SIDE EXIT**

Knockouts/holes are provided in both sides of the heater cabinet for external pipe routing. Horizontal pipe runs are to be kept to an absolute minimum.

**12.2.4 TOP EXIT**

a) Remove the plastic plugs from the air heater top panel and the fan chamber floor.

b) Pass the flow and return pipes (flow pipe to the rear) from below and then locate the pipes with the circulator body connections. Fully tighten the connections to the main body before completing the connections to the top ends of the Flow and Return pipes, ensuring that the pipework does not restrict access to the circulator thermostat phial pocket or the air heater heat exchanger access panel.

**NOTE: In order to maintain an air tight seal, the supplied grommets MUST be used where the flow and return pipes pass through the upper sealing plate and diaphragm.**

**IMPORTANT: Ensure that the fittings on the circulator body are well supported when making flow and return connections.**

12.2.5 Using good quality duct tape, seal around the Flow and Return pipes where they pass through the air heater top panel and fan chamber floor.

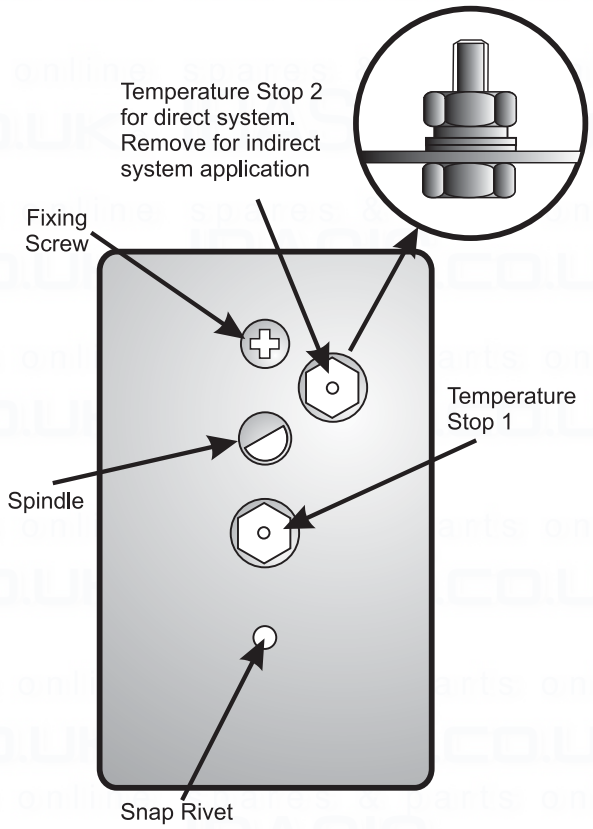


**FIGURE 9.**
**POSITION OF TEMPERATURE STOPS**

# 13. INTEJAN CIRCULATOR COMMISSIONING

## 13.1 PREPARATION

13.1.1 Ensure that the gas and electrical supplies are OFF.

13.1.2 Fill the water circulation system, clear any air locks and check for water soundness, sealing any leaks detected.

13.1.3 Refit the sealing panel and secure using the 15 x fixing screws.

**NOTE:** Whilst the sealing panel needs to be fixed in such a manner so as to ensure an air tight seal, care MUST be taken not to over tighten the fixing screws.

## 13.2 LIGHTING IGNITION & MAIN BURNERS

13.2.1 Turn on the gas supply to the heater.

13.2.2 Set both the "AIR HEATER" and "WATER HEATER" switches on the time control unit to the "OFF" position.

13.2.3 Set the thermostat so that it reaches the maximum stop.

13.2.4 Locate the LED status indicator which can be observed through the inspection hole located in the bottom right hand corner of the control module.

13.2.5 Turn on the mains power supply to the heater

13.2.6 Set the "WATER HEATER" switch on the time control to "CONT." and observe the LED status indicator.

13.2.7 Whilst the control module runs through its diagnostic cycle the decimal point (DP) in the bottom right hand corner of the LED display will flash continuously.

13.2.8 The ignitor will spark for a maximum period of 60 seconds during which time the ignition burner and main burner SHOULD ignite and the igniter will stop.

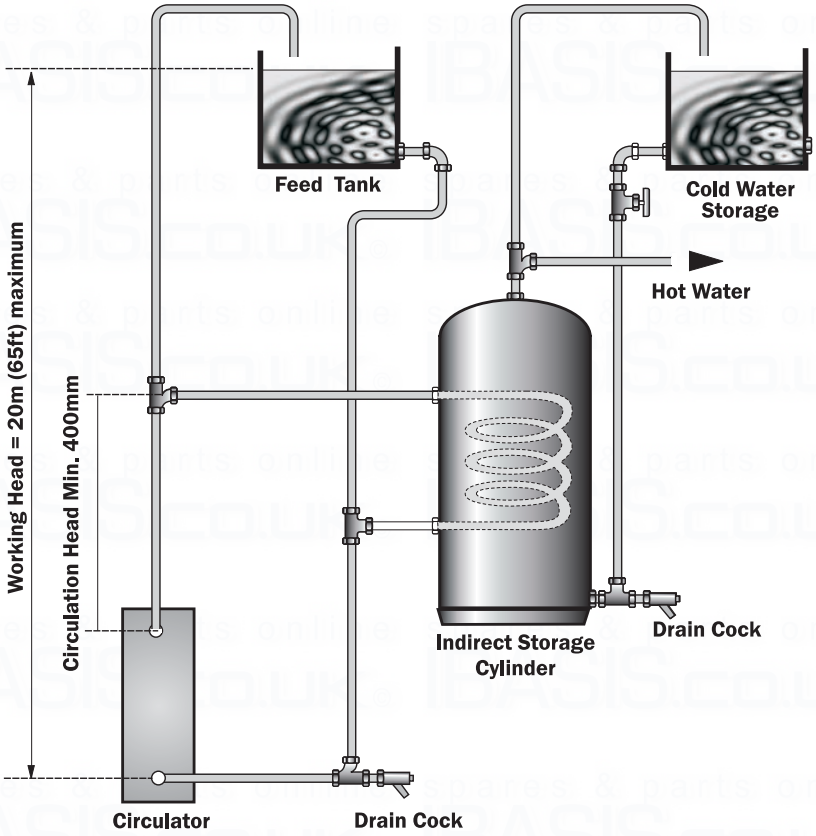


**FIGURE 10**
**TYPICAL INTEJAN INDIRECT SYSTEM APPLICATION**

13.2.9 When the control module reaches stage 8.(indicated by "8" on the LED) power is fed to the gas valve and the green LED "ON" light on the indicator panel will illuminate. After a period of approx. 5 seconds, the module will move on to stage 9 (indicated by "9" on the LED).

**NOTE: Regardless of when the burner ignites during the 60 second period, the LED will continue to display stage 9.**

13.2.10 If, after the 60 second period, the main burner has ignited the LED indicator will show "0" and the green LED "ON" light on the indicator panel will remain steady.

13.2.11 If the main burner fails to ignite, the red LED marked "LOCKOUT" will illuminate on the display panel and the LED status indicator will display an alphanumeric character relevant to the fault detected.

13.2.12 In the event of a lockout and the ignition and main burners failing to ignite, reference should be made to table 4 in the fault finding section of these instructions in order to establish the fault condition.

13.2.13 Test for gas leakage at the supply, multifunctional control, ignition burner and main burner using proprietary detection fluid, sealing any leaks found.

13.2.14 Allow the circulator to operate for a minimum of 15 minutes to ensure stability.

13.2.15 Reset the thermostat to the desired water temperature.

12.2.16 Set the time control to the desired "on" and "off" periods.

13.2.17 Set the "WATER HEATER" switch on the time control to "TIMED".

## 13.3 WATER BURNER PRESSURE TEST

**NOTE:** THE WATER CIRCULATOR BURNERS ARE PRE-SET AND SHOULD NOT REQUIRE ADJUSTING.

13.3.1 Loosen the screw on the outlet pressure test point and fit a pressure test gauge (see Figure 7)

13.3.2 Check the gauge reading against the information at Table 4.

13.3.3 If necessary, use the burner pressure adjuster to obtain the required gauge reading as shown at Table 4.

13.3.4 Remove the pressure gauge and re-tighten the screw on the outlet pressure test point.

## 13.4 SAFETY CHECKS

13.4.1 Check for gas soundness within the appliance.

13.4.2 Check for water soundness around circulator and ALL joints.

13.4.3 Turn on both the gas and electrical supplies to the heater.

13.4.4 Set the "WATER HEATER" switch on the time control unit to "CONT".

13.4.5 Light the ignition and main burners as described in paragraph 13.2

13.4.6 Allow the circulator to operate for a period of 5 minutes to stabilise.

13.4.7 Turn off gas supply to heater at the heater gas cock. DO NOT TURN OFF AT GAS METER!

13.4.8 The circulator SHOULD automatically go into "LOCKOUT" indicated by the red LED on the indicator panel and the LED status indicator will show "H"

13.4.9 Reinstate gas supply and wait for a minimum period of 10 seconds.

13.4.10 Depress the "RESET" button on the indicator panel.

13.4.11 The heater will go through its ignition procedure and the ignition and main burners SHOULD ignite.

13.4.12 Set the "WATER HEATER" switch on the time control unit to "TIMED"

# 14. INSTRUCTIONS FOR USERS

14.1 If the building is unoccupied, ensure that the user instructions are left taped to the air heater for the user's reference and that the installation instructions are left at or near the air heater for use on future service calls.

14.2 If the building is occupied, hand the user instructions over and ensure that the user understands:

14.2.1 How to light both the air heater and water circulator.

14.2.2 How to re-set the air heater or water circulator if "LOCKOUT" occurs.

14.2.3 How to operate the time control, thermista-stat and the SUMMER AIRFLOW switch.

14.2.4 That the time control must be reset following a power failure.

14.2.5 How to use the circulator thermostat to set the water temperature.

14.2.6 How to turn off the heater and switch off the electrical supply to the heater.

14.2.7 How to remove, clean and refit the air filter and at what intervals, (i.e. fortnightly, or weekly for new houses).

14.2.8 How to control the heating system by opening and closing warm air outlets.

14.2.9 How to obtain summer air circulation.

14.2.10 That the air grilles on the heater or heater compartment; grilles and ventilators in the walls, windows or doors of the building **MUST NOT BE OBSTRUCTED**.

14.2.11 That the heater must be serviced at least once a year by a competent person to ensure efficient and safe operation.

14.2.12 That the red instructions for safe use have been pointed out and understood.

14.2.13 That expert help must be obtained if persistent "LOCKOUT" occurs.

# 15. MAINTENANCE

**NOTE: It is recommended that this appliance be serviced at intervals of no less than 12 months.**

**IMPORTANT: Ensure that the gas and electricity supplies are isolated before commencing any maintenance or replacement of components. Because the appliance is room sealed, it is also imperative that if at any stage of repairs the gasket on the sealing plate is damaged it MUST be replaced! After completion of any maintenance, always test for gas soundness and carry out a complete functional test of the appliance in accordance with the Commissioning Instructions at paragraphs 11.1 to 11.6 inclusive.**

## 15.1 ROUTINE MAINTENANCE

15.1.1 Operate the appliance and check for the correct function of the burner and controls.

15.1.2 Turn OFF the gas and electrical supplies to the appliance.

15.1.3 Remove the air heater front panel.

15.1.4 Remove and check the return air filter/cleaner for cleanliness, remove and clean the air circulation fan as detailed in paragraph 15.6.

15.1.5 Remove the burner and controls assembly as detailed in paragraph 15.2, inspect and clean the main burner and injector as necessary. Examine the main burner for cracks, including hairline cracks, exchanging the burner as necessary.

15.1.6 Inspect and clear the ignition burner orifice.

15.1.7 Clean the heat exchanger flueways by thoroughly brushing from above and below.

15.1.8 By viewing through the fan aperture, and using a torch or similar, examine the heat exchanger externally for signs of cracks or holes, particularly around welded joints.

15.1.9 Using a torch or similar, introduce a light source into the heat exchanger burner aperture and upper access port, and again examine the heat exchanger for signs of cracks or holes, particularly around welded joints, whilst again viewing through the fan aperture.

15.1.10 Refit the air circulation fan, burner and controls assembly, and air filter/air cleaner.

15.1.11 Allow the air heater to operate for approximately 15 minutes to ensure stability and, with the main burner lit, ensure that the operation of the air circulation fan does not affect the main burner flame profile.

15.1.12 Locate the flue gas test point (see figure 1) and attach a flue gas analyser to the test point in accordance with the manufacturer's instructions.

**NOTE:** The $CO/CO_2$ ratio should be no greater than 0.008

15.1.13 Fully commission the appliance in accordance with paragraphs 11 and 13.

**NOTE:** The flue gas test MUST NOT be used as an alternative to servicing the heater!

**15.2 MULTIFUNCTION CONTROL AND AIR HEATER/WATER CIRCULATOR BURNER ASSEMBLY REMOVAL**

**NOTE:** Both the air heater and water circulator burner assemblies, as well as their respective ignition burner assemblies, MUST be removed as a complete unit together with their respective multifunction control.

**PROCEDURE**

15.2.1 Ensure that the gas and electrical supplies are switched OFF.

15.2.2 Remove the front door from the heater.

15.2.3 Remove the fixing screws that hold the sealing panel in place and carefully remove the panel.

15.2.4 Disconnect the electronic module from the relevant multifunction control by removing the securing bolt and sliding it towards the left of the heater unit, taking care not to cause damage.

15.2.5 Disconnect the gas supply to the water circulator multifunction control at the flared connection on the top of the gas supply feed.

15.2.6 For removal of the air heater multifunction control, remove the relevant burner assembly fixing screws.

15.2.7 Break the gas supply at the gas union and remove the gas feed pipe fixing screw.

15.2.8 Whilst supporting the assembly, carefully remove the fixing screws securing the multifunction control.

15.2.9 Carefully remove the complete assembly, by sliding the sealing grommet out of the bulkhead, taking care not to cause damage to the grommet!

15.2.10 Refitting the burner assembly is a reverse procedure of the above instructions.

## 15.3 BURNER ASSEMBLY CLEANING

15.3.1 Remove the burner assembly as detailed above.

15.3.2 Disconnect the ignition burner gas feed pipe from the ignition burner

15.3.3 Release the single screw, nut and washer securing the ignition burner to the main burner and remove the ignition burner.

15.3.4 Release the 2 screws, nuts and washers securing the main burner to the mounting bracket and remove the main burner.

15.3.5 Clean the burner thoroughly both inside and out with a soft brush. **DO NOT ENLARGE, DISTORT OR DAMAGE BURNER HOLES.**

15.3.6 Reassemble in reverse order.

## 15.4. IGNITION BURNER & ELECTRODE REMOVAL & REPLACEMENT

15.4.1 Remove the burner as detailed in paragraph 15.2 above.

15.4.2 Disconnect the igniter lead from electrode.

15.4.3 Break the gas feed at the burner end of the gas feed pipe.

15.4.4 Release the single screw, nut and washer securing the ignition burner to the main burner assembly and carefully remove the ignition burner assembly.

15.4.5 Release the electrode securing nut from the ignition burner assembly and withdraw the electrode.

15.4.6 Release the ignition burner feed pipe securing nut from the ignition burner assembly and withdraw the feed pipe and injector from the ignition burner assembly. Disconnect the ignition burner injector from the ignition burner feed pipe hook.

15.4.7 Release the 2 x 5mm screws securing the ignition burner bracket to the ignition burner mounting bracket and remove the ignition burner bracket.

15.4.8 Refitting or replacement is in reverse order.

**NOTE:** If, at any time, the gas supply feed pipe is removed from the multifunction control, the 'O' ring MUST be replaced.

## 15.5 AIR CIRCULATING FAN REMOVAL & CLEANING

15.5.1 Ensure that the electrical supply is isolated.

15.5.2 Remove the front door from the heater and remove the 3 x fixing screws on the electrical door assembly.

15.5.3 Open the door assembly outwards on its hinges (see Figure 7) such that access is gained to the rear of the assembly.

15.5.4 Disconnect the fan flying leads from the fan assembly.

15.5.5 Release the fan assembly securing screw and withdraw the fan assembly from the heater cabinet, avoiding damage to the fan blades.

15.5.6 Remove all dust from both the impeller and motor, taking care to not disturb the balance of the fan.

15.5.7 Refitting or replacement is in reverse order.

## 15.6 CONTROL MODULE REMOVAL

15.6.1 Ensure that the electrical supply is isolated.

15.6.2 Remove the front door from the heater.

15.6.3 Loosen the top and bottom screws holding the electrical cover plate in place on the electrical door assembly. (see Figure 6)

DO NOT COMPLETELY REMOVE THE SCREWS AT THIS STAGE.

15.6.4 Remove the cover plate by sliding it upwards, such that it exposes the control module.

15.6.5 Carefully disconnect the module by lifting the connecting blocks off the circuit board (see Figure 11)

**NOTE: There is no need to loosen any of the connection screws on the connector blocks!**

15.6.6 Completely remove the top and bottom cover plate screws and pull the control module free of the electrical door assembly.

15.6.7 Fit the new control module in place and partially fit the cover plate fixing screws. DO NOT TIGHTEN SCREWS AT THIS STAGE!

15.6.8 Re-connect the module by carefully pushing the connector blocks onto the circuit board.

15.6.9 Re-fit the electrical cover plate and tighten the cover plate screws.

15.6.10 Re-establish electrical supply.

15.6.11 Commission air heater and water circulator as described in the relevant sections above.

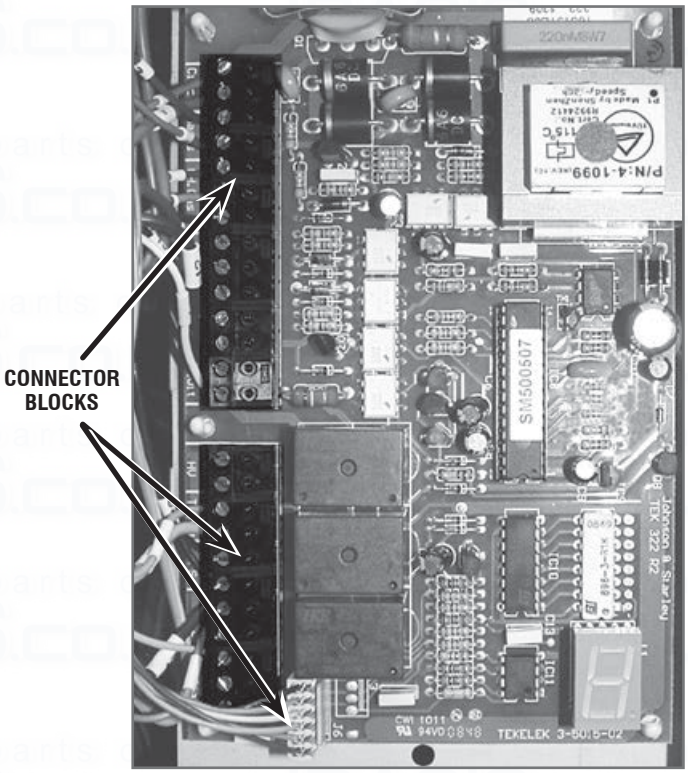


**NOTE: To disconnect the module, LIFT the connector blocks off the circuit board. DO NOT remove the wires from the connector blocks!**

**FIGURE 11**
**CONTROL MODULE**

## 15.7 TIME CONTROL, SWITCH & LED INDICATOR (DAUGHTER BOARD) REMOVAL

### PREPARATION

15.7.1 Ensure that the electrical supply is isolated.

15.7.2 Remove the appliance front door and release the 3 x securing screws on the electrical door assembly.

15.7.3 Open the door assembly outwards on its hinges (see Figure 6) such that access is gained to the rear of the assembly.

### TIME CONTROL REMOVAL

15.7.3 Disconnect spade terminal connectors **"C1", "C2", "C3"** and **"C5"** from the time control.

15.7.4 Release the 3 x fixing screws securing the clock mounting plate to the electrical door and withdraw the total assembly from the door.

15.7.5 Remove the 3 x M3 bolts that secure the time clock mechanism and remove from the mounting plate.

15.7.6 Refitting or replacement is in reverse order.

### LED INDICATOR (DAUGHTER BOARD)

15.7.7 Disconnect the daughter board by unplugging the flylead from the control module board.

15.7.8 Release the 3 x fixing screws securing the clock mounting plate to the electrical door and withdraw the total assembly from the door.

15.7.9 Remove the 2 x M3 nuts holding the board onto the bolts and remove.

15.7.10 Replacement is in reverse order, ensuring to refit the spacers.

### SWITCH/S REMOVAL

15.7.11 Disconnect the spade terminal connectors **"S1", "S2"** and **"S3"** or **"S4", "S5"** and **"S6"** from the switch terminals.

15.7.12 Release the switch/s by pressing out from the back of the electrical door assembly.

15.7.15 Re-fitting of the electrical door assembly is in reverse order.

15.7.16 Close the electrical door assembly and secure using the 3 x fixing screws.

15.7.17 Set the time control to correct time.

15.7.18 Set the time control to the required “ON” and “OFF” periods.

## 15.8 FAN DELAY CONTROL/LIMIT SWITCH REMOVAL

15.8.1 Ensure that the electrical supply is isolated.

15.8.2 Remove the appliance front door.

15.8.3 Remove the 15 x screws holding the sealing panel in place and carefully remove the panel.

15.8.4 Unscrew the four connection screws in the terminal block and remove the red, brown and two black feed wires from the terminal block.

15.8.5 Remove the 2 x fixing screws holding the FDC/limit switch assembly in place and withdraw from the appliance.

15.8.6 Refitting or replacement is in reverse order.

## 15.9 WATER CIRCULATOR THERMOSTAT REMOVAL

15.9.1 Remove the appliance front door.

15.9.2 Remove the 15 x screws holding the sealing panel in place and carefully remove the panel.

15.9.3 Disconnect the two spade terminals from the back of the thermostat, located underneath the bulkhead.

15.9.4 Carefully loosen the control knob from the shaft of the thermostat using a large flat head screw driver and remove.

15.9.5 Loosen and remove the 2 x screws securing the thermostat and remove the thermostat from the bulkhead.

15.9.6 Refitting or replacement is in reverse order.

## 15.10 HEAT EXCHANGER ACCESS

15.10.1 Ensure that the gas and electrical supplies are isolated.

15.10.2 Remove the appliance front door.

15.10.3 Remove the 15 x screws holding the sealing panel in place and carefully remove the panel.

15.10.4 Remove the burner assembly as detailed at paragraph 15.2

15.10.5 Remove the multifunctional control for the water circulator (IF FITTED)

15.10.6 Release the 4 x screws securing the combustion chamber heat shield and withdraw the heat shield.

15.10.7 Release the 4 x screws securing the top access cover plate and withdraw the cover plate and gasket.

15.10.8 Release the 4 x screws securing the heat exchanger top sealing plate and withdraw the sealing plate and gasket.

15.10.9 Reassembly is in reverse order.

**NOTE: When reassembling ensure that gaskets are soundly sealed and replaced where necessary (See cautionary note at paragraph 10) Prior to use, you MUST fully commission the heater in accordance with these instructions.**

## 15.11 FLUE FAN, REMOVAL & CLEANING

15.11.1 Remove the air circulation fan as detailed at paragraph 15.5

15.11.2 Disconnect the power supply to the pressure switch.

15.11.3 Carefully remove the feed pipes to the pressure switch TAKING CARE TO NOTE THEIR POSITION.

15.11.4 Unscrew the 2 x fixing screws holding the pressure switch in place and remove the switch.

15.11.5 Carefully open the plastic insulators on the fan fly-lead and break the electrical connections such that the spade connectors can be fed through the grommet on the sealing plate.

15.11.6 Remove the 11 x fixing screws holding the flue fan sealing plate in place and remove the plate.

**NOTE: WHEN REMOVING THE SEALING PLATE, CAREFULLY FEED THE PRESSURE PIPES THROUGH THE GROMMETS IN THE PLATE, TAKING CARE NOT TO PULL THE PIPES OFF THE FAN PRESSURE TAPPINGS!**

15.11.7 Release the 4 x fixing screws holding the flue fan in place

15.11.8 Carefully withdraw the fan and its gasket from the collector box, taking care not to damage the fan blades.

15.11.9 Remove all dust from both the impeller and motor, taking care not to disturb the balance of the fan.

15.11.10 Refitting/replacement is in reverse order.

## 16. DEFECT DIAGNOSIS

**IMPORTANT: If an electrical defect occurs after installation of the appliance; preliminary earth continuity, polarity, and resistance to earth checks should be carried out with a multimeter. On completion of any maintenance/fault-finding task that has required the breaking and remaking of electrical connections, then checks of continuity, polarity, and resistance to earth must be repeated.**

16.1 The following table shows the LED status indicator display and the corresponding fault condition, along with the lockout type. It should be noted that under certain conditions the red LED relating to the air heater may flash. This is part of the control sequence and the module should reset automatically. It is ONLY necessary to press the "RESET" button if the red LED is continually illuminated !

**NOTE: When the air heater and water circulator are used in combination, the status indications for the water circulator will override those for the air heater; therefore LED displays "8" and "9" will override "5" and "6". For this reason, it is strongly recommended that the air heater and water circulator be commissioned independently of each other.**

**DEFECT DIAGNOSIS**

| LED | CYCLE | FAULT CONDITION | LOCKOUT TYPE |
|---|---|---|---|
| 0 | Running | None - all is well | NONE |
| 1 | Air Proving | Air switch closed | ABSOLUTE |
| 2 | Air Proving | Gas valve relay ON (either) | ABSOLUTE |
| 3 | Air Proving | Air switch Closure failure | ABSOLUTE |
| 4 | Prove Heater Relay | Gas valve current, relay should be open | AIR HEATER |
| 5 | Prove Heater Valve | None (wait for ignition burner) | AIR HEATER |
| 6 | Prove Heater Valve | Flame failure | AIR HEATER |
| 7 | Prove Circulator Relay | Gas valve current, relay should open | CIRCULATOR |
| 8 | Prove Circulator Valve | None (wait for ignition burner) | CIRCULATOR |
| 9 | Prove Circulator Valve | Flame failure | CIRCULATOR |
| A | Running | Excessive cabinet temperature | ABSOLUTE |
| C | Running | Air flow senor our of range | AIR HEATER |
| E | Running | Problem with air circulator fan | AIR HEATER |
| F | Running | Air heater limit stat | AIR HEATER |
| H | Running | Circulator limit stat | CIRCULATOR |
| L | Running | Circulator limit stat | AIR HEATER |
| U | Running | Mains spikes detected (no fan demand) | AIR HEATER |

**TABLE 6. FAULT FINDING**

## 17. DIAGNOSIS FLOWCHARTS

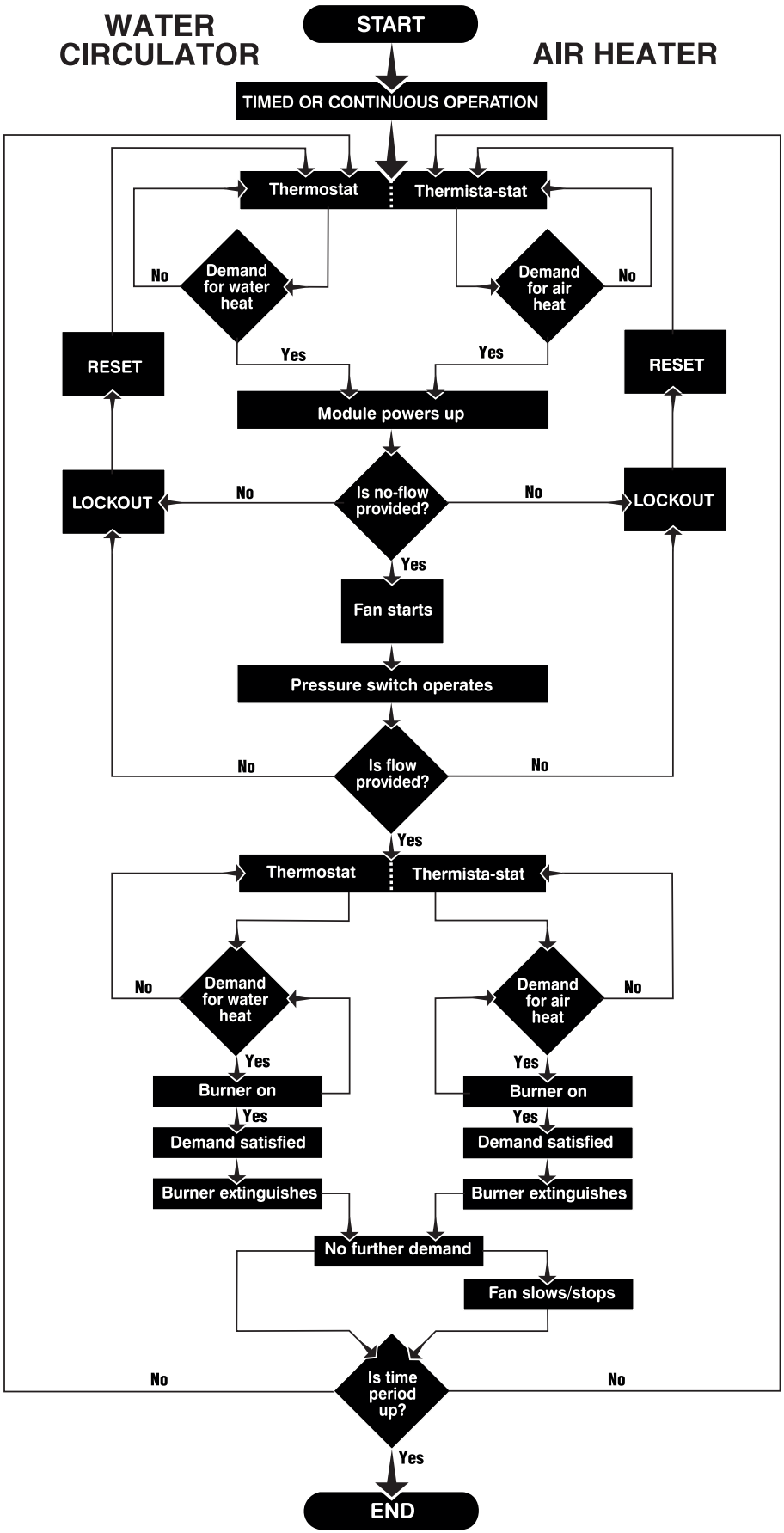


FIGURE 12. CONTROL FLOWCHART

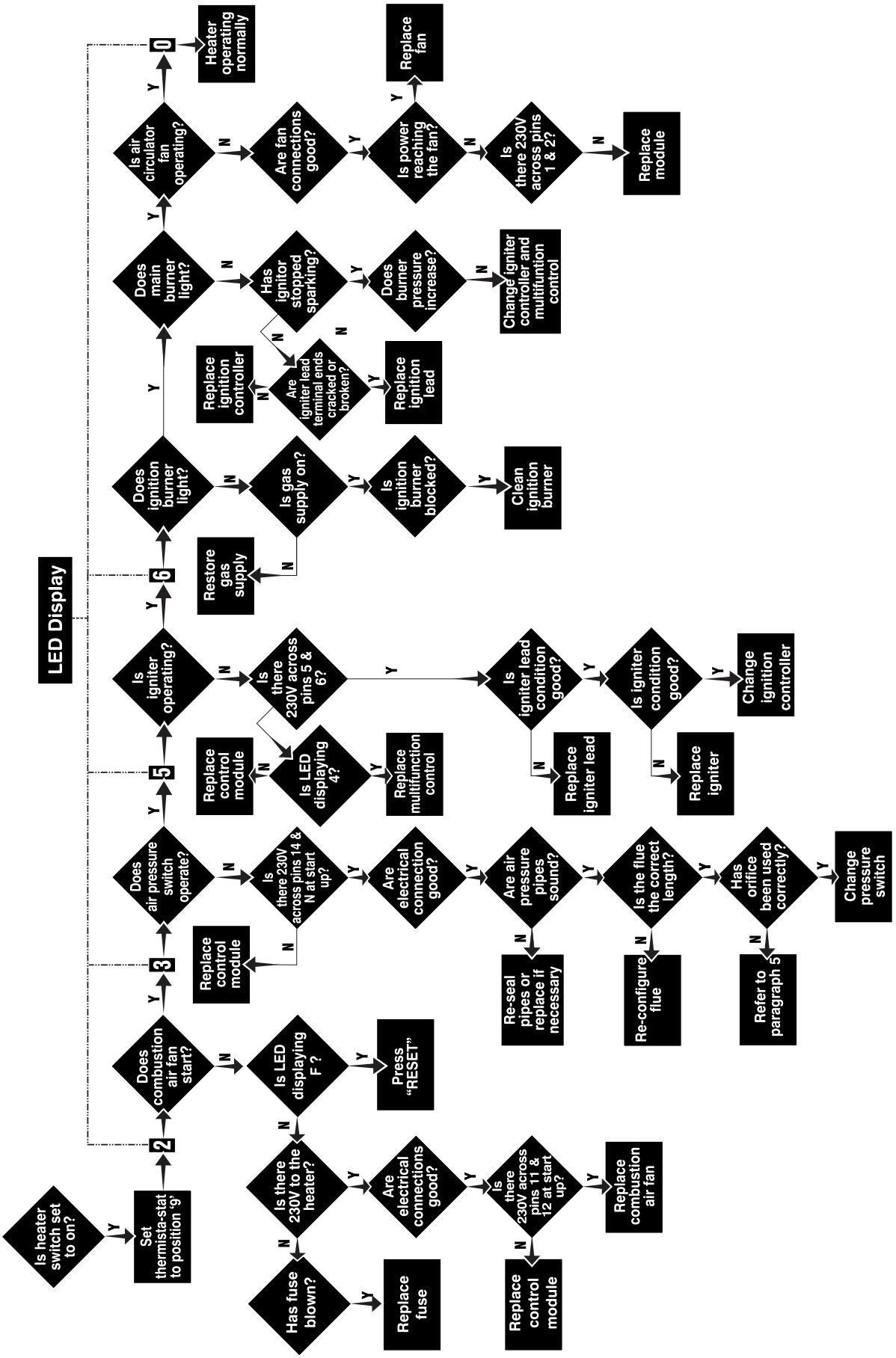


FIGURE 13. AIR HEATER DIAGNOSIS FLOWCHART

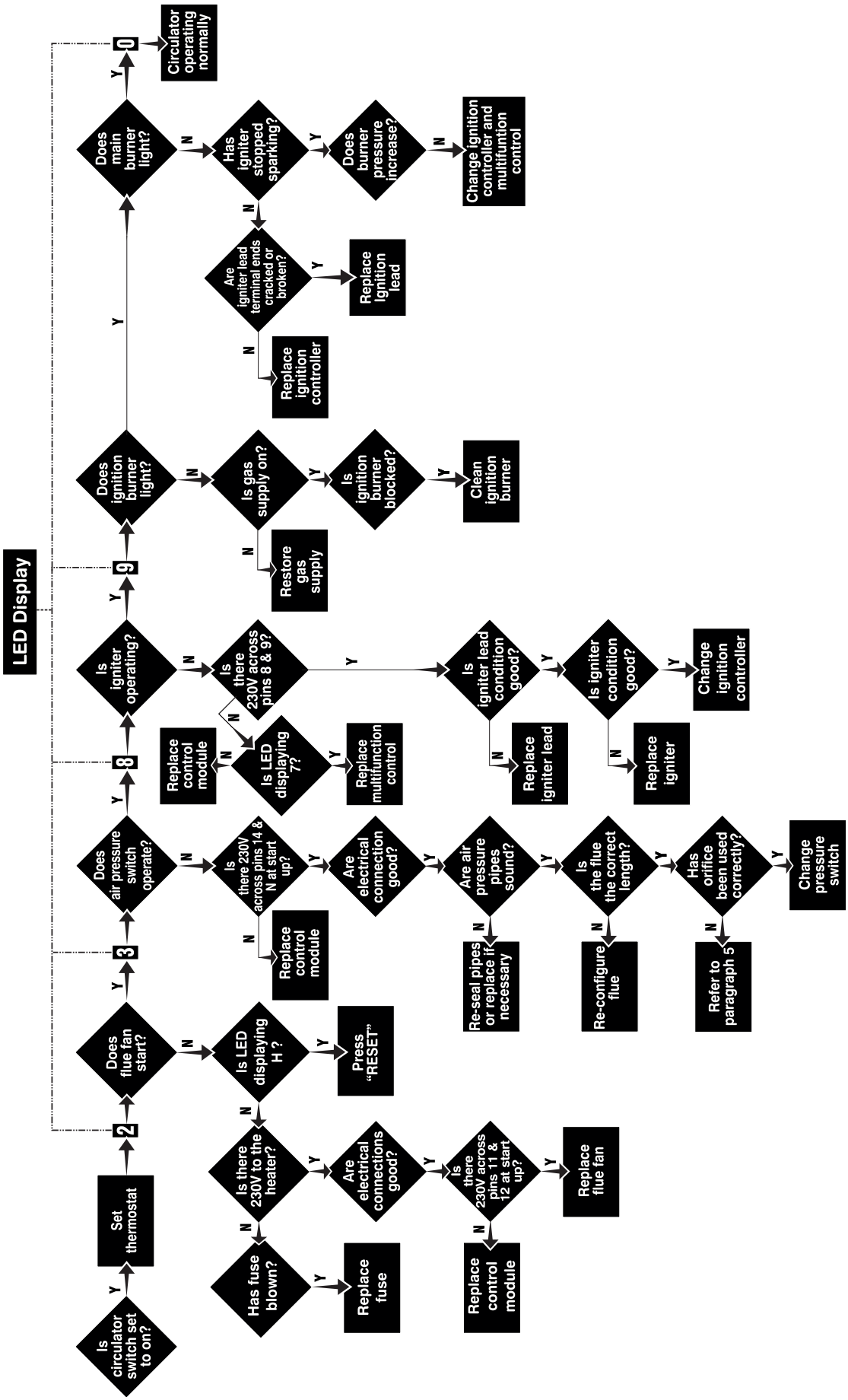


FIGURE 14. CONTROL FLOWCHART

## 18. LOGIC DIAGRAM

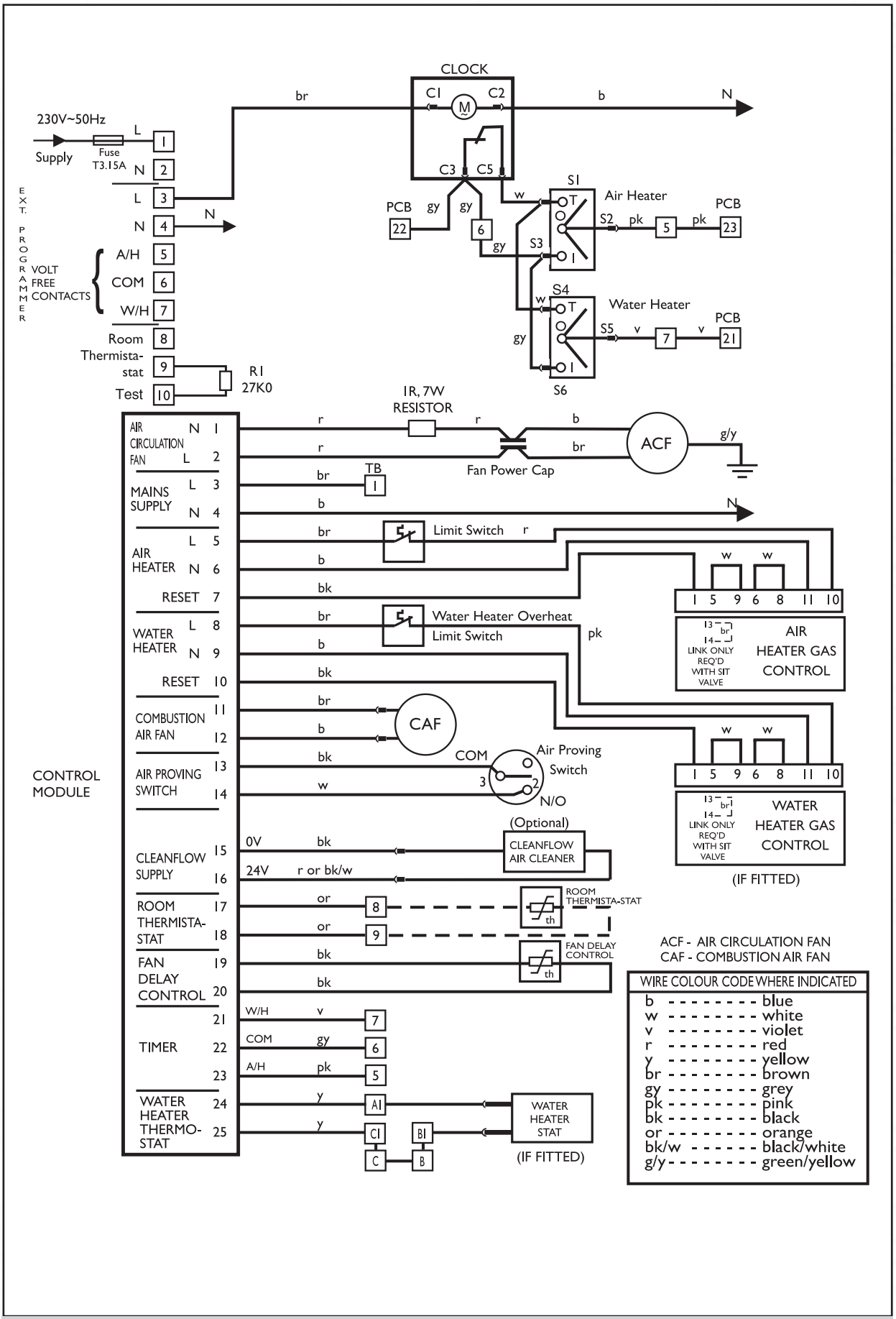


**FIGURE 15. LOGIC DIAGRAM**

# 19. SCHEMATIC DIAGRAM

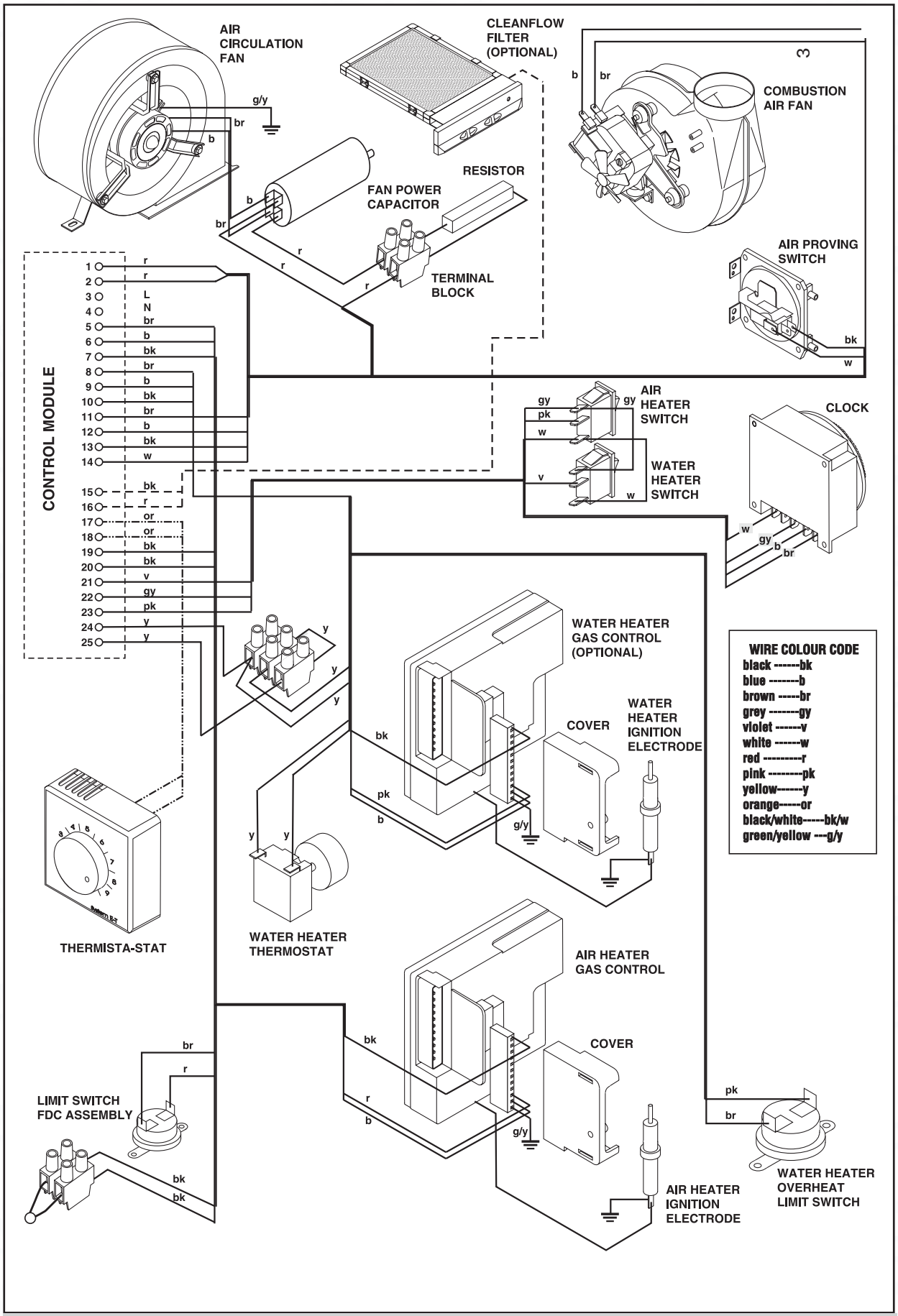


FIGURE 16. SCHEMATIC DIAGRAM

## 20. CIRCUIT DIAGRAM

Showing connections of an external controller

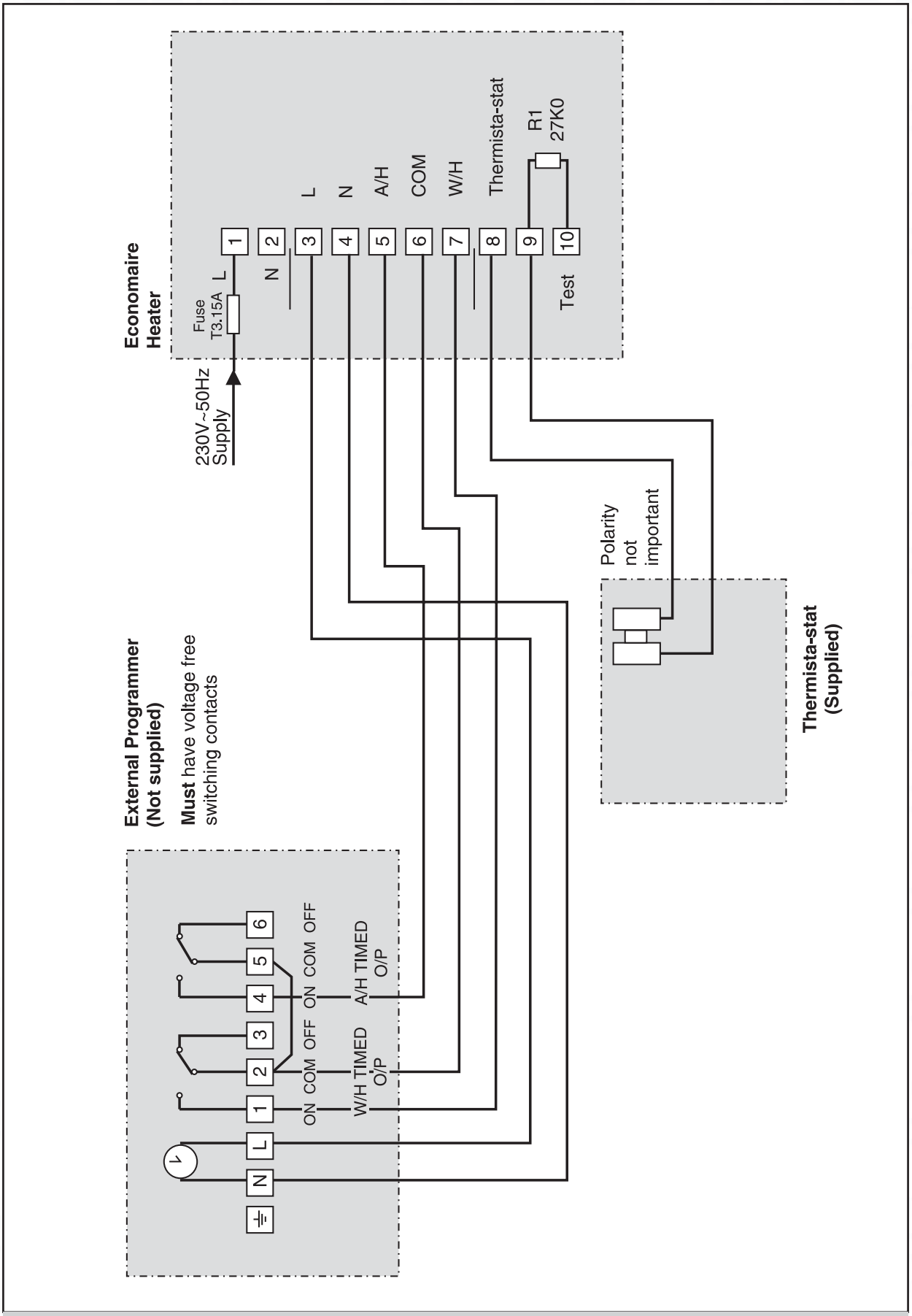


FIGURE 17. CIRCUIT DIAGRAM

## 21. DIMENSIONS

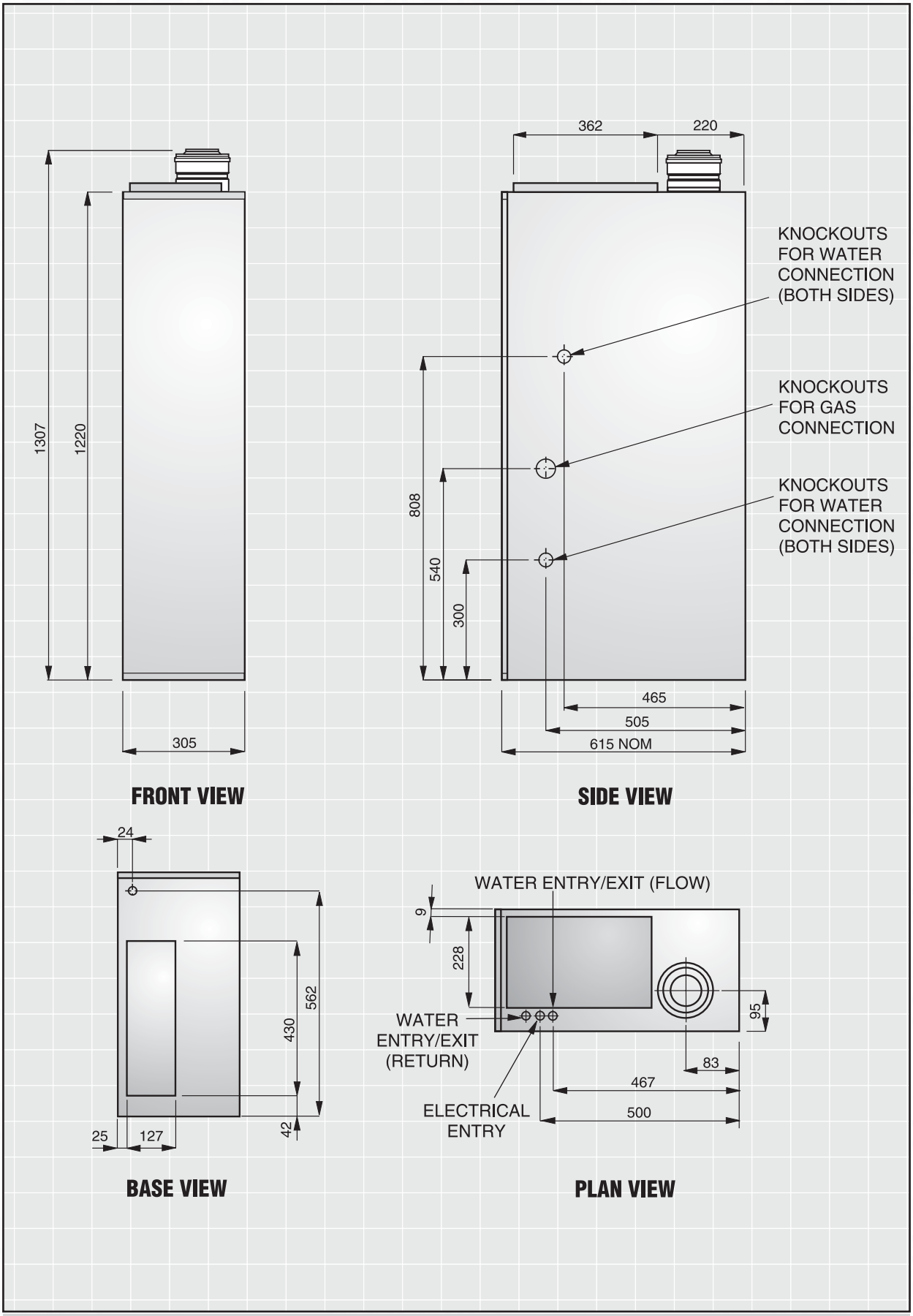


FIGURE 18. DIMENSIONS

# 22. LIST OF SPARES

| | ITEM | G.C. No. | PART No. | DESCRIPTION | QTY |
|---|---|---|---|---|---|
| ECONOMAIRE 32 | 1 | E69625 | 1000-0521020 | Wiring Harness | 1 |
| | 2 | E80119 | N320-0350005 | Wiring Harness (air heater) | 1 |
| | 3 | | | Heat Exchanger | 1 |
| | | | N322-0350005 | Heat Exchanger (from serial number 54000501) | 1 |
| | 4 | E69627 | 1000-0520990 | FDC & Limit Switch | 1 |
| | | | 1000-0522340 | FDC & Limit Switch (from serial number 54000501) | 1 |
| | 5 | E69623 | N320-0145000 | Filter Assembly | 1 |
| | | | N322-0145000 | Filter Assembly (from serial number 54000501) | 1 |
| | 6 | E69629 | A700-0702000 | Complete Burner Assembly | 1 |
| | | | N322-0702000 | Complete Burner Assembly (from serial number 54000501) | 1 |
| | 7 | E69630 | 1000-0708260 | Main Burner injector (Polidoro Ref: AL270) | 1 |
| | 8 | 173 096 | 1000-0704810 | Ignition Burner Assembly | 1 |
| | 9 | E69631 | 1000-0520860 | Air Pressure Switch | 1 |
| | 10 | E69632 | 1000-0520830 | Clock Mechanism | 1 |
| | 11 | E69635 | 1000-0708370 | Ignition Burner Feed Pipe | 1 |
| | | | 1000-0708970 | Ignition Burner Feed Pipe (from serial number 54000501) | 1 |
| | 12 | E69638 | N320-0505000 | Electric Flame Control Device (S.I.T.) | 1 |
| | 13 | | 1000-0708990 | Igniter Lead | 1 |
| | 14 | E69640 | 1000-0708190 | Multifunction Control | 1 |
| | 15 | 245 514 | 1000-0515620 | Thermista-stat | 1 |
| | 16 | E69642 | N320-0504000 | Combustion Air Fan (SIFAN) | 1 |
| | | | N310-0504005 | Combustion Air Fan (SIFAN) (from serial number 54000501) | 1 |
| | 17 | E69644 | N320-0500000 | Complete Electrical Panel | 1 |
| | | | N322-0500000 | Complete Electrical Panel (from serial number 54000501) | 1 |
| | 18 | E80146 | 1000-0520850 | Control Module | 1 |
| | 19 | 245 509 | 1000-0513820 | Fuse T3.15A (anti surge) | 1 |
| | 20 | 245 542 | 1000-0515970 | Capacitor 15$\mu$f | 1 |
| | 21 | E69650 | N320-0167000 | Cabinet Door Assembly | 1 |
| | | | N322-0167000 | Cabinet Door Assembly (from serial number 54000501) | 1 |
| | 22 | E76429 | 1000-0500375 | Air Circulation Fan | 1 |
| | 23 | 381 712 | 1000-0705140 | Ignition Burner Injector (No 36) | 1 |
| | | 392935 | 1000-0701260 | Ignition Burner Injector (No 27) (from serial number 54000501) | 1 |
| | 24 | E69653 | 1000-1507310 | Gasket | 1 |
| | 25 | E95-494 | S01159 | Air Pressure Tube Kit | 1 |
| | 26 | E80151 | 1000-2501050 | Grommet | 1 |
| | 27 | | 1000-0708410 | 12mm Flared Connector | 1 |
| | 28 | E69656 | 1000-0505540 | Electronics Box (Cleanflow) | 1 |
| | 29 | E69658 | A0186 x 0309 | Cleanflow Filter Medium (pad) | 2 |
| | 30 | E69662 | 1000-0708210 | Gas Feed Pipe | 1 |
| | | | 1000-0708950 | Gas Feed Pipe (from serial number 54000501) | 1 |
| | 31 | E69666 | 1000-0708360 | Gas Feed Pipe | 1 |
| | 32 | | | View Port Window (NOT AVAILABLE AS A SPARE) | 1 |
| | 33 | E69648 | 1000-0520880 | Reset Panel (Daughter Board) | 1 |
| INTEJAN WATER HEATER | 34 | 244-876 | S00284 | Main Body Assembly (inc. baffle & spring clip) | 1 |
| | 36 | E80155 | 1000-0521870 | Wiring Harness | 1 |
| | 37 | E69670 | 1000-0520920 | Overheat Cut-Off Switch | 1 |
| | 38 | E01686 | A700-0700000 | Complete Burner Assembly | 1 |
| | | | N322-0700000 | Complete Burner Assembly (from serial number 54000501) | 1 |
| | 39 | E69640 | 1000-0708190 | Multifunction Control | 1 |
| | 40 | 384 615 | BOS 00562 | Burner Arm | 1 |
| | 41 | 244880 | BOS 02397/1 | Ignition Burner Assembly | 1 |
| | 42 | H50495 | S01482 | Thermostat | 1 |
| | | | 1000-0708930 | Thermostat (from serial number 54000501) | 1 |
| | 43 | E80158 | 1000-0702090 | Main Injector Nozzle (Amal 187/001/400) | 1 |
| | 44 | 392935 | 1000-0701260 | Ignition Burner Injector (No 27) | 1 |
| | 45 | E80159 | 1000-0708990 | Igniter Lead | 1 |
| | 46 | E69693 | 1000-0708240 | Main Burner Gas Feed Pipe | 1 |
| | | | 1000-0708940 | Main Burner Gas Feed Pipe (from serial number 54000501) | 1 |
| | 47 | 230 328 | 1000-2500070 | Phial Retaining Plug | 1 |
| | 48 | E69638 | N320-0505000 | Electronic Flame Control Device (S.I.T) | 1 |
| | 49 | E69695 | 1000-0708400 | Ignition Burner Feed Pipe | 1 |
| | | | 1000-0708960 | Ignition Burner Feed Pipe (from serial number 54000501) | 1 |
| | 50 | E69707 | 1000-0708200 | Gas Feed Pipe | 1 |
| | 51 | E80151 | 1000-2501050 | Grommet | 1 |

## 23. EXPLODED DIAGRAM

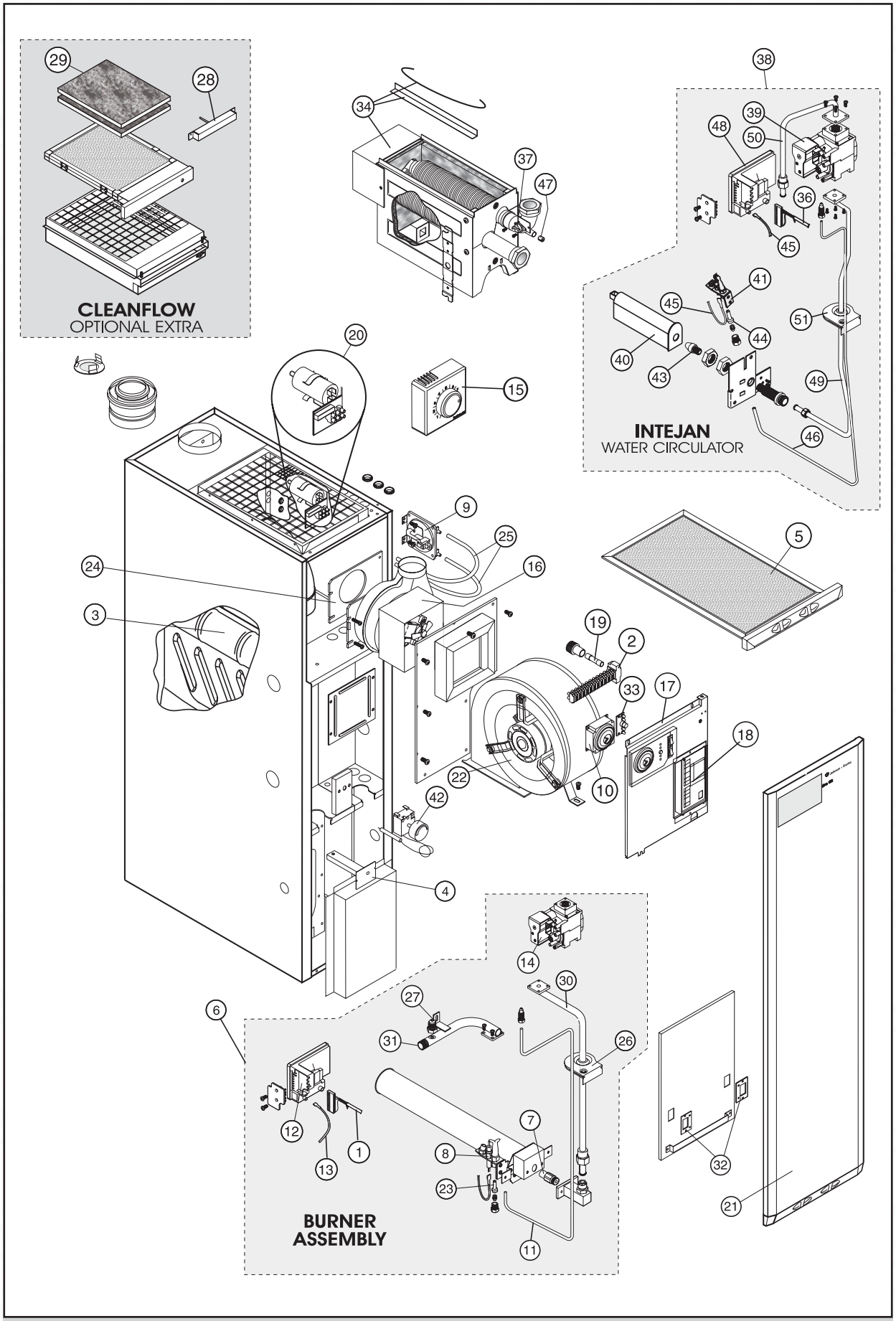


FIGURE 19. EXPLODED DIAGRAM

# IMPORTANT INFORMATION

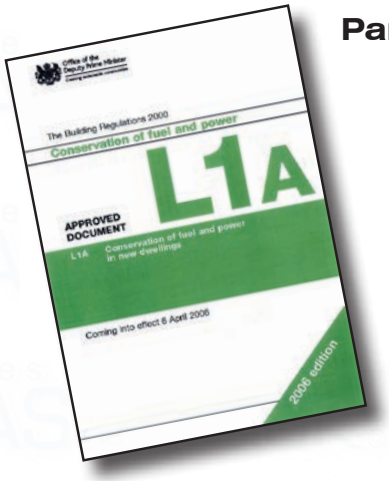


**Warm Air Heating**
Fully complies with
**Part L of the Building Regulations**
by following the guidance in the
**British Standard BS 5864**
and the
**Heating Compliance Guide**
For further information contact
Johnson & Starley
on Telephone: 01604 762881

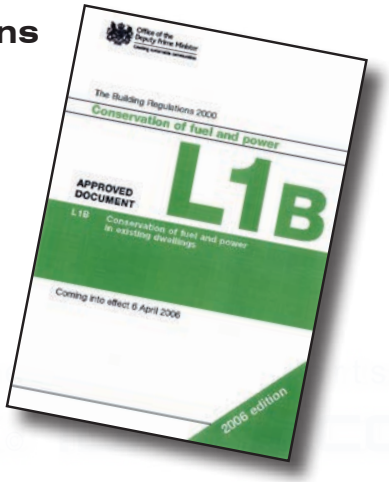


**These kits are readily available from Johnson & Starley Ltd**
Telephone the Sales Office for further information

| ECONOMAIRE 32 ANCILLARY'S | | |
|---|---|---|
| | **Description** | **Product Code** |
| 1 | Cleanflow Air Filter | **ECF32** |
| 2 | Return Air Plenums | **RAP32** |
| 3 | Side Return Air Kits | **SR32** |
| 4 | Return Air Kits | **RAK32** |
| 5 | Slot Fix Panels | **TS32/TSG32** |
| 6 | Top Closure Panels | **TP32/TC32** |
| 7 | Base Duct | **WB32/WBX32** |
| 8 | Base Tray | **BT32** |
| 9 | Pump Kit ( no pump) | **EKP1** |
| 10 | Pump Kit (with pump) | **EKP2** |
| **INTEJAN WATER HEATER KIT ANCILLARY'S** | | |
| 11 | Flow Return Kit | **EFTA32** |
| 12 | Rear Riser | **ER32** |
| 13 | Top Closure Panel | **TP32R/TC32R** |
| 12 | Base Duct | **WBX32R** |

# Code Of Practice

For the installation, commissioning and servicing of domestic heating and hot water products

Benchmark places responsibilities on both manufacturers and installers.* The purpose is to ensure that customers** are provided with the correct equipment for their needs, that it is installed, commissioned and serviced in accordance with the manufacturer's instructions by competent persons and that it meets the requirements of the appropriate Building Regulations. Installers are required to carry out work in accordance with the following:

## Standards of Work

- Be competent and qualified to undertake the work required.
- Install, commission, service and use products in accordance with the manufacturer's instructions provided.
- Ensure that where there is responsibility for design work, the installation is correctly sized and fit for purpose.
- Meet the requirements of the appropriate Building Regulations. Where this involves notifiable work be a member of a Competent Persons Scheme or confirm that the customer has notified Local Authority Building Control (LABC), prior to work commencing.
- Complete all relevant sections of the Benchmark Checklist/Service Record when carrying out commissioning or servicing of a product or system.
- Ensure that the product or system is left in a safe condition and, whenever possible, in good working order.
- Highlight to the customer any remedial or improvement work identified during the course of commissioning or servicing work.
- Refer to the manufacturer's helpline where assistance is needed.
- Report product faults and concerns to the manufacturer in a timely manner.

## Customer Service

- Show the customer any identity card that is relevant to the work being carried out prior to commencement or on request.
- Give a full and clear explanation/demonstration of the product or system and its operation to the customer.
- Hand over the manufacturer's instructions, including the Benchmark Checklist, to the customer on completion of an installation.
- Obtain the customer's signature, on the Benchmark Checklist, to confirm satisfactory demonstration and receipt of manufacturer's instructions.
- Advise the customer that regular product servicing is needed, in line with manufacturers' recommendations, to ensure that safety and efficiency is maintained.
- Respond promptly to calls from a customer following completion of work, providing advice and assistance by phone and, if necessary, visiting the customer.
- Rectify any installation problems at no cost to the customer during the installer's guarantee period.

benchmark COLLECTIVE MARK
THE MARK OF QUALITY FOR THE INSTALLATION, COMMISSIONING AND SERVICING OF DOMESTIC HEATING AND HOT WATER SYSTEMS

*The use of the word "installer" is not limited to installation itself and covers those carrying out installation, commissioning and/or servicing of heating and hot water products, or the use of supporting products (such as water treatment or test equipment).
**Customer includes householders, landlords and tenants.

© Heating and Hotwater Industry Council (HHIC)

www.centralheating.co.uk

# WARM AIR HEATER AND CIRCULATOR COMMISSIONING CHECKLIST

**This Commissioning Checklist is to be completed in full by the competent person who commissioned the warm air unit and associated equipment as a means of demonstrating compliance with the appropriate Building Regulations and then handed to the customer to keep for future reference.**

Failure to install and commission this equipment to the manufacturer's instructions may invalidate the warranty but does not affect statutory rights.

| | |
|---|---|
| Customer name: | Telephone number: |
| Address: | |
| Warm Air Unit Make and Model | |
| Warm Air Unit Serial Number | |
| Commissioned by (PRINT NAME): | Gas Safe Reg. No. |
| Company name: | Telephone number: |
| Company address: | |
| | Commissioning date: |
| **To be completed by the customer on receipt of a Building Regulations Compliance Certificate*:** | |
| Building Regulations Notification Number (if applicable) | |

| **CONTROLS** (tick the appropriate boxes if applicable) | | | | |
|---|---|---|---|---|
| Time and temperature control to heating | Room thermostat and programmer/timer | | Programmable Roomstat | |
| | Load/weather compensation | | Optimum start control | |
| Time and temperature control to hot water | Cylinder thermostat and programmer/timer | | Warm air unit | |
| Heating zone valves | Fitted | | Not required | |
| Hot water zone valves | Fitted | | Not required | |
| Thermostatic radiator valves | Fitted | | Not required | |
| Automatic bypass system | Fitted | | Not required | |
| Warm Air Unit Interlock | Yes | No | If YES Volume: | Litres |

| **FOR WARM AIR HEATERS ONLY** | | | | |
|---|---|---|---|---|
| Has the system been balanced in accordance with the heater manufacture's instructions? | Yes | | No | |
| Was an anemometer used? | Yes | | No | |
| Have balancing dampers been fitted? | Yes | | No | |

| **FOR WARM AIR HEATING: MEASURE AND RECORD** | | |
|---|---|---|
| Burner operating pressure | | mbar |
| Heat input | | kW |
| Temperature difference between return air inlet and nearest outlet | | °C |

| **FOR HOT WATER GENERATORS:** measure and record | | |
|---|---|---|
| Burner operating pressure | | mbar |
| Heat input | | kW |
| Water flow temperature | | °C |

| **ALL INSTALLATIONS** | | |
|---|---|---|
| The heating and hot water system complies with the appropriate Building Regulations | Yes | |
| The system and associated products have been installed and commissioned in accordance with the manufacturer's instructions | Yes | |
| The efficient operation of system and its controls have been demonstrated to and understood by the customer | Yes | |
| The manufacturer's literature, including Benchmark Checklist and Service Record, has been explained and left with the customer | Yes | |

| |
|---|
| Commissioning Engineer's Signature |
| Customer's Signature |
| (To confirm demonstration of equipment and receipt of appliance instructions) |

*All installations in England and Wales must be notified to Local Authority Building Control (LABC) either directly or through a Competent Persons Scheme. A Building Regulations Compliance Certificate will then be issued to the customer.

benchmark COLLECTIVE MARK
THE MARK OF QUALITY FOR THE INSTALLATION, COMMISSIONING AND SERVICING OF DOMESTIC HEATING AND HOT WATER SYSTEMS

© Heating and Hotwater Industry Council (HHIC)

## SERVICE RECORD

**It is recommended that your heating system is serviced regularly and that the appropriate Service Interval Record is completed.**

**Service Provider**

Before completing the appropriate Service Record below, please ensure you have carried out the service as described in the manufacturer's instructions. Always use the manufacturer's specified spare part when replacing controls.

| SERVICE 01 | | | | | Date: |
|---|---|---|---|---|---|
| Engineer name: | | | | | |
| Company name: | | | | | |
| Telephone No: | | | | | |
| Gas safe register No: | | | | | |
| Record: | At max. rate: | CO | ppm | **AND** | $CO_2$ % |
| | At min. rate: (Where Possible) | CO | ppm | **AND** | $CO_2$ % |
| Comments: | | | | | |
| Signature | | | | | |

| SERVICE 02 | | | | | Date: |
|---|---|---|---|---|---|
| Engineer name: | | | | | |
| Company name: | | | | | |
| Telephone No: | | | | | |
| Gas safe register No: | | | | | |
| Record: | At max. rate: | CO | ppm | **AND** | $CO_2$ % |
| | At min. rate: (Where Possible) | CO | ppm | **AND** | $CO_2$ % |
| Comments: | | | | | |
| Signature | | | | | |

| SERVICE 03 | | | | | Date: |
|---|---|---|---|---|---|
| Engineer name: | | | | | |
| Company name: | | | | | |
| Telephone No: | | | | | |
| Gas safe register No: | | | | | |
| Record: | At max. rate: | CO | ppm | **AND** | $CO_2$ % |
| | At min. rate: (Where Possible) | CO | ppm | **AND** | $CO_2$ % |
| Comments: | | | | | |
| Signature | | | | | |

| SERVICE 04 | | | | | Date: |
|---|---|---|---|---|---|
| Engineer name: | | | | | |
| Company name: | | | | | |
| Telephone No: | | | | | |
| Gas safe register No: | | | | | |
| Record: | At max. rate: | CO | ppm | **AND** | $CO_2$ % |
| | At min. rate: (Where Possible) | CO | ppm | **AND** | $CO_2$ % |
| Comments: | | | | | |
| Signature | | | | | |

| SERVICE 05 | | | | | Date: |
|---|---|---|---|---|---|
| Engineer name: | | | | | |
| Company name: | | | | | |
| Telephone No: | | | | | |
| Gas safe register No: | | | | | |
| Record: | At max. rate: | CO | ppm | **AND** | $CO_2$ % |
| | At min. rate: (Where Possible) | CO | ppm | **AND** | $CO_2$ % |
| Comments: | | | | | |
| Signature | | | | | |

| SERVICE 06 | | | | | Date: |
|---|---|---|---|---|---|
| Engineer name: | | | | | |
| Company name: | | | | | |
| Telephone No: | | | | | |
| Gas safe register No: | | | | | |
| Record: | At max. rate: | CO | ppm | **AND** | $CO_2$ % |
| | At min. rate: (Where Possible) | CO | ppm | **AND** | $CO_2$ % |
| Comments: | | | | | |
| Signature | | | | | |

| SERVICE 07 | | | | | Date: |
|---|---|---|---|---|---|
| Engineer name: | | | | | |
| Company name: | | | | | |
| Telephone No: | | | | | |
| Gas safe register No: | | | | | |
| Record: | At max. rate: | CO | ppm | **AND** | $CO_2$ % |
| | At min. rate: (Where Possible) | CO | ppm | **AND** | $CO_2$ % |
| Comments: | | | | | |
| Signature | | | | | |

| SERVICE 08 | | | | | Date: |
|---|---|---|---|---|---|
| Engineer name: | | | | | |
| Company name: | | | | | |
| Telephone No: | | | | | |
| Gas safe register No: | | | | | |
| Record: | At max. rate: | CO | ppm | **AND** | $CO_2$ % |
| | At min. rate: (Where Possible) | CO | ppm | **AND** | $CO_2$ % |
| Comments: | | | | | |
| Signature | | | | | |

| SERVICE 09 | | | | | Date: |
|---|---|---|---|---|---|
| Engineer name: | | | | | |
| Company name: | | | | | |
| Telephone No: | | | | | |
| Gas safe register No: | | | | | |
| Record: | At max. rate: | CO | ppm | **AND** | $CO_2$ % |
| | At min. rate: (Where Possible) | CO | ppm | **AND** | $CO_2$ % |
| Comments: | | | | | |
| Signature | | | | | |

| SERVICE 10 | | | | | Date: |
|---|---|---|---|---|---|
| Engineer name: | | | | | |
| Company name: | | | | | |
| Telephone No: | | | | | |
| Gas safe register No: | | | | | |
| Record: | At max. rate: | CO | ppm | **AND** | $CO_2$ % |
| | At min. rate: (Where Possible) | CO | ppm | **AND** | $CO_2$ % |
| Comments: | | | | | |
| Signature | | | | | |

*All installations in England and Wales must be notified to Local Authority Building Control (LABC) either directly or through a Competent Persons Scheme. A Building Regulations Compliance Certificate will then be issued to the customer.

benchmark COLLECTIVE MARK
THE MARK OF QUALITY FOR THE INSTALLATION, COMMISSIONING AND SERVICING OF DOMESTIC HEATING AND HOT WATER SYSTEMS

© Heating and Hotwater Industry Council (HHIC)

sustainable solutions
under one roof

**Johnson & Starley Ltd**
Rhosili Road, Brackmills,
Northampton NN4 7LZ

sales@johnsonandstarley.co.uk
marketing@johnsonandstarley.co.uk

**Reception/Customer Service**
01604 762881

**Fax**
01604 767408

Dravo

**Johnson & Starley Dravo Division Industrial H&V**

**Sales**
01604 707022

sales@johnsonandstarley.co.uk
www.dravo.co.uk

Johnson & Starley

90 Johnson & Starley
Anniversary 1922 - 2012